MAKING MODERN LIVING POSSIBLE

Quick Selection 2013

Automatic controls, electronic controls, compressors, condensing units and packages for all refrigerants

This catalogue covers the most popular refrigeration products and code numbers.

>5000

code numbers in one catalogue

Simply the most easy way to find the code numbers you need for your specific application – all in one place.

>100

products in one catalogue

The most frequently used refrigeration products from the extended Danfoss ranges have been collected in one catalogue. A timesaving way to find exactly what you are looking for. A part of your toolbox.

www.danfoss.com

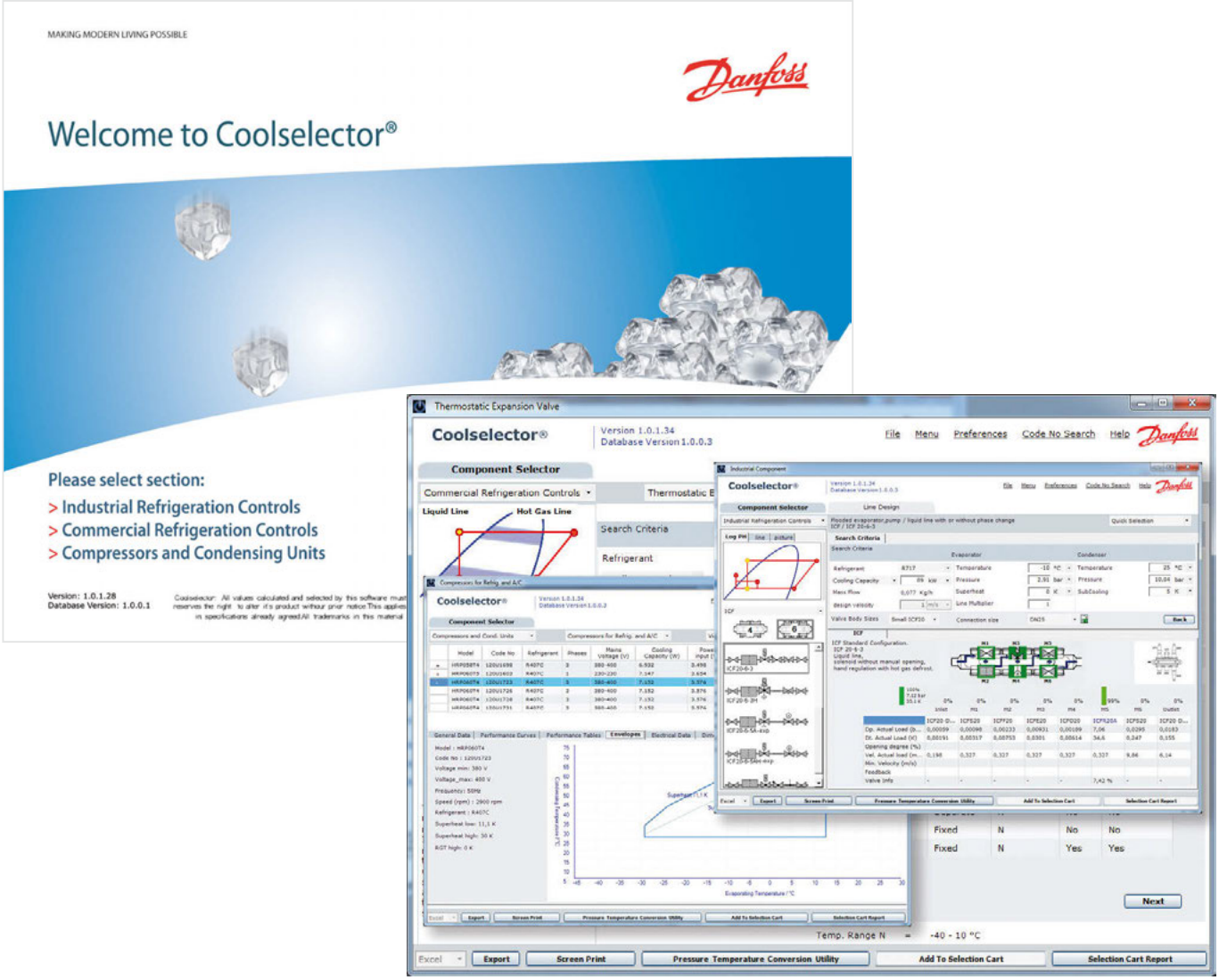

Coolselector® – Select the right component the coolest way

As the world gets more complicated we all need support to make the right choices.
Danfoss helps you make the right selections also for the other components that you will need in your professional daily life.
Coolselector® calculates for you the performance of the component at your conditions, not just according to the standards.

Select the right component the coolest way

Do you pick your solenoid valve for your cold room by connection size alone?
Maybe you could actually go for a size smaller, or maybe the cold room would have done better if you had optimized the selection of that particular valve to the flow. Most professionals know that selecting a thermostatic expansion valve can turn out to be a tricky task if the conditions are not exactly standard conditions. You will need to take superheat, sub cooling and pressure drop into consideration to find the optimal valve with the right orifice. But also other components require consideration before selecting the best valve for the purpose. Even the solenoid valve should be checked for the specific performance under the conditions you intend to expose it to.

Coolselector® helps you optimize the choice of component and even tells you how the component behaves at the conditions given.
With the new version of Coolselector® you have all the components required to control a commercial refrigeration plant. Danfoss have now included the well-known compressor and condensing unit selection program RS+3 in Coolselector® which means that you no longer have to open several programs to calculate a compressor, a solenoid valve and an expansion valve. You can now do this in just one program.
The new section with compressors and condensing units also includes compressors for heat pumps which mean that you easily can select the best suited compressor for heat pump applications.
Danfoss have on purpose kept the familiar and user friendly interface from RS+3 and just extended the content in accordance with the additional compressors. Coolselector® will continue development and enhancement and offers you automatic-updates also in future.
Please do not hesitate and go to the web address:
coolselector.danfoss.com to down-load the program.

Table of contents

Table of contents – Type

Table of contents – Type

T2/TE2 – Thermostatic expansion valves

Thermostatic expansion valves regulate the injection of liquid refrigerant into evaporators. Injection is controlled by the refrigerant superheat. Therefore the valves are especially suitable for liquid injection in "dry" evaporators where the superheat at the evaporator outlet should always be kept constant.

Features

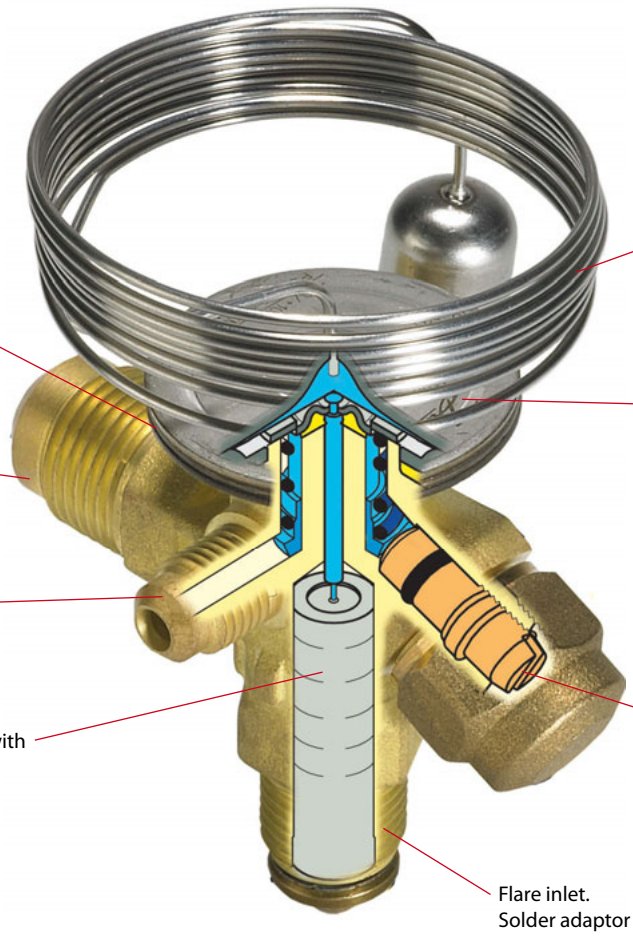

Applications	Advantages	Facts

· Traditional refrigeration
· Heat pump systems
· Air conditioning units
· Liquid coolers
· Transport refrigeration
	· Large temperature range. Equally applicable to freezing, refrigeration and air conditioning applications.
	· Interchangeable orifice assembly
	  · easy stocking
	  · easy capacity matching
	  · better service
		· Can be supplied with MOP (Max. Operating Pressure) Protects the compressor motor against excessive evaporating pressure during normal operation.
		· Valves for special temperature ranges can be supplied.
		· Flare / solder adaptor can be supplied.

Technical data and ordering

Thermostatic element with: bulb strap, without: orifice, strainer cone and nuts — Flare × flare connection

Refrigerant	Valve type	Pressure equalization Flare	Capillary tube	Connection Inlet × outlet		Code no. Range N −40 to +10°C		Range NM −40 to −5°C	Range NL −40 to −15°C	Range B −60 to −25°C	
			m	in. × in.	mm × mm	Without MOP	MOP +15°C	MOP 0°C	MOP −10°C	Without MOP	MOP −20°C
R22/R407C	TX 2	-	1.5	3/8 × 1/2	10 × 12	068Z3206	068Z3208	068Z3224	068Z3226	068Z3207	068Z3228
	TEX 2	¼ in.	1.5	3/8 × 1/2	10 × 12	068Z3209	068Z3211	068Z3225	068Z3227	068Z3210	068Z3229
R407C	TZ 2	-	1.5	3/8 × 1/2	10 × 12	068Z3496	068Z3516	-	-	-	-
	TEZ 2	¼ in.	1.5	3/8 × 1/2	10 × 12	068Z3501	068Z3517	-	-	-	-
R134a	TN 2	-	1.5	3/8 × 1/2	10 × 12	068Z3346	068Z3347	068Z3393	068Z3369	-	-
	TEN 2	¼ in.	1.5	3/8 × 1/2	10 × 12	068Z3348	068Z3349	068Z3392	068Z3370	-	-
R404A/R507	TS 2	-	1.5	3/8 × 1/2	10 × 12	068Z3400	068Z3402	068Z3406	068Z3408	068Z3401	068Z3410
	TES 2	¼ in.	1.5	3/8 × 1/2	10 × 12	068Z3403	068Z3405	068Z3407	068Z3409	068Z3404	068Z3411

Thermostatic element with: bulb strap, without: orifice, filter cone and nuts — Flare × solder connection

Refrigerant	Valve type	Pressure equalization Solder	Capillary tube	Connection Inlet Flare	Outlet ODF solder	Code no. Range N −40 to +10°C		Range NL −40 to −15°C	Range B −60 to −25°C	
			m			Without MOP	MOP +15°C	MOP −10°C	Without MOP	MOP −20°C
R22/R407C	TX 2	-	1.5	3/8 in.	1/2 in.	068Z3281	068Z3287	-	068Z3357	-
	TX 2	-	1.5	10 mm	12 mm	068Z3302	068Z3308	-	068Z3361	-
	TEX 2	¼ in.	1.5	3/8 in.	1/2 in.	068Z3284	068Z3290		068Z3359	-
	TEX 2	6 mm.	1.5	10 mm	12 mm	068Z3305	068Z3311	068Z3367	068Z3363	068Z3277
R407C	TZ 2	-	1.5	3/8 in.	1/2 in.	-	068Z3329	-	-	-
	TZ 2	-	1.5	10 mm	12 mm	068Z3502	068Z3514	-	-	-
	TEZ 2	¼ in.	1.5	3/8 in.	1/2 in.	068Z3446	068Z3447	-	-	-
	TEZ 2	6 mm.	1.5	10 mm	12 mm	068Z3503	068Z3515	-	-	-
R134a	TN 2	-	1.5	3/8 in.	1/2 in.	068Z3383	068Z3387	-	-	-
	TN 2	-	1.5	10 mm	12 mm	068Z3384	068Z3388	-	-	-
	TEN 2	¼ in.	1.5	3/8 in.	1/2 in.	068Z3385	068Z3389	-	-	-
	TEN 2	6 mm.	1.5	10 mm	12 mm	068Z3386	068Z3390	-	-	-
R404A/R507	TS 2	-	1.5	3/8 in.	1/2 in.	068Z3414	068Z3416	068Z3429	068Z3418	068Z3420
	TS 2	-	1.5	10 mm	12 mm	068Z3435	068Z3423	068Z3436	068Z3425	068Z3427
	TES 2	¼ in.	1.5	3/8 in.	1/2 in.	068Z3415	068Z3417	068Z3430	068Z3419	068Z3421
	TES 2	6 mm.	1.5	10 mm	12 mm	068Z3422	068Z3424	068Z3437	068Z3426	068Z3428

[1]) For R407C plants, please select valves from the dedicated R407C program

Orifice assembly

Valve type Orifice	R134a		R404A		R407C		R22		Code no.	
	kW	TR	kW	TR	kW	TR	kW	TR	Flare × Flare version	Solder adapter version
T2 Orif. 0X	0.68	0.19	0.64	0.18	0.92	0.26	0.90	0.25	068-2002	068-2089
T2 Orif. 00	1.2	0.34	1.3	0.37	1.8	0.51	1.8	0.51	068-2003	068-2090
T2 Orif. 01	2.1	0.59	2.6	0.75	3.5	1.0	3.5	0.99	068-2010	068-2091
T2 Orif. 02	2.5	0.73	3.7	1.1	4.8	1.4	4.7	1.3	068-2015	068-2092
T2 Orif. 03	4.3	1.2	6.3	1.8	8.1	2.3	8.0	2.3	068-2006	068-2093
T2 Orif. 04	6.4	1.8	9.9	2.8	12.4	3.5	12.1	3.5	068-2007	068-2094
T2 Orif. 05	8.4	2.3	13.0	3.7	16.5	4.7	16.7	4.8	068-2008	068-2095
T2 Orif. 06	10.1	2.9	15.5	4.4	19.7	5.6	19.7	5.6	068-2009	068-2096

The rated capacity is based on: Evaporating temperature t_e = +4.4 °C for range N, condensing temperature t_c = +38 °C, and refrigerant temperature ahead of valve t_l = +37 °C.

Solder adaptor without orifice assembly

Connection – ODF solder	Code no.
1/4 in.	068-2062
6 mm	068-2063
6 mm	068-4101[1])
3/8 in.	068-2060
10 mm	068-2061
10 mm	068-4100[1])

[1]) Including filter.

Filter

Filter type	Code no.
For flare connection	068-0003
For solder adaptor	068-0015

The adaptor is for use with thermostatic expansion valves T2 and TE2. When the adaptor is fitted correctly it meets the sealing requirements of DIN 8964.

The flare orifice in T2 and TE2 can be used with a solder adaptor when the orifice filter is replaced with a specific filter intended for solder adaptors. Only in this way the sealing requirements of DIN 8964 can be fulfilled.
Solder adaptors for filter driers (FSA) must not be used in the T2 inlet.

Bulb strap (delivered with the valve) and accessories

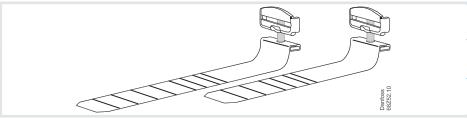

Type	Length	Max. diameter of suction line	Code no.
T2 / TE2 Accessories	110 mm	1 1/8" (28 mm)	068U3507
	190 mm	2" (50 mm)	067N3508

Capacities

Capacity in kW, range N -40 °C to +10 °C. Opening superheat sh= 4.4 K

Valve type/ Orifice	Cond. temp.[3] [°C]	R134a Capacity in [kW] Evaporating temp. [°C]					R404A Capacity in [kW] Evaporating temp. [°C]					R407C Capacity in [kW] Evaporating temp. [°C]					R22 Capacity in [kW] Evaporating temp. [°C]			
		-30	-10	-5	0	5	-40	-35	-30	-10	0	-10	-5	0	5	10	-35	-30	0	5
T2 / 0X	25	0.54	0.62	0.62	0.61	0.58	0.55	0.58	0.61	0.65	0.62	0.90	0.90	0.88	0.86	0.81	0.79	0.82	0.81	0.76
T2 / 00		0.67	0.95	1.0	1.0	1.0	0.7	0.8	0.9	1.2	1.2	1.6	1.7	1.7	1.7	1.6	1.1	1.2	1.6	1.5
T2 / 01		0.92	1.5	1.6	1.7	1.8	1.0	1.2	1.4	2.2	2.4	2.8	3.0	3.2	3.3	3.3	1.5	1.7	2.9	2.9
T2 / 02		1.0	1.7	1.9	2.1	2.2	1.1	1.3	1.6	2.8	3.3	3.4	3.8	4.2	4.5	4.6	1.7	2.0	3.8	4.0
T2 / 03		1.7	2.9	3.2	3.5	3.7	1.9	2.2	2.7	4.7	5.5	5.7	6.4	7.1	7.6	7.9	2.9	3.3	6.4	6.7
T2 / 04		2.5	4.2	4.7	5.2	5.5	2.7	3.2	3.8	7.1	8.5	8.4	9.5	10.6	11.7	12.5	4.2	4.8	9.7	10.1
T2 / 05		3.3	5.6	6.2	6.8	7.3	3.5	4.2	5.0	9.4	11.2	11.0	12.5	14.0	15.4	16.3	5.4	6.3	13.1	13.7
T2 / 06		3.9	6.7	7.5	8.2	8.7	4.2	5.0	6.0	11.2	13.4	13.2	15.0	16.8	18.5	19.4	6.4	7.4	15.4	16.2
T2 / 0X	35	0.57	0.67	0.68	0.69	0.68	0.52	0.55	0.59	0.67	0.68	0.94	0.95	0.95	0.94	0.92	0.82	0.86	0.92	0.89
T2 / 00		0.69	1.0	1.1	1.2	1.2	0.67	0.78	0.88	1.3	1.3	1.7	1.8	1.8	1.9	1.9	1.1	1.2	1.8	1.8
T2 / 01		0.96	1.6	1.8	2.0	2.1	0.95	1.1	1.3	2.3	2.6	2.9	3.2	3.4	3.6	3.8	1.6	1.8	3.3	3.5
T2 / 02		1.1	1.9	2.1	2.4	2.6	1.1	1.3	1.5	2.9	3.6	3.5	4.0	4.5	4.9	5.3	1.8	2.1	4.4	4.7
T2 / 03		1.8	3.1	3.5	4.0	4.4	1.8	2.1	2.6	4.9	6.1	6.0	6.8	7.6	8.4	9.0	3.0	3.5	7.4	8.0
T2 / 04		2.6	4.6	5.2	5.9	6.5	2.6	3.1	3.8	7.5	9.5	8.7	10.0	11.4	12.9	14.2	4.4	5.1	11.2	12.1
T2 / 05		3.5	6.1	6.9	7.7	8.6	3.4	4.1	4.9	9.8	12.5	11.5	13.2	15.1	17.0	18.6	5.8	6.7	15.3	16.7
T2 / 06		4.1	7.2	8.2	9.2	10.2	4.0	4.8	5.8	11.7	14.9	13.8	15.9	18.1	20.4	22.2	6.8	7.8	17.9	19.7
T2 / 0X	45	0.57	0.69	0.71	0.73	0.74	0.46	0.51	0.54	0.65	0.68	0.94	0.96	0.97	0.97	0.97	0.84	0.88	0.98	0.97
T2 / 00		0.70	1.1	1.2	1.3	1.3	0.61	0.70	0.81	1.2	1.3	1.7	1.8	1.9	1.9	1.9	1.1	1.3	1.9	1.9
T2 / 01		0.97	1.7	1.9	2.1	2.3	0.86	1.0	1.2	2.2	2.7	2.9	3.2	3.5	3.8	4.0	1.6	1.9	3.6	3.8
T2 / 02		1.1	1.9	2.2	2.5	2.8	0.97	1.2	1.4	2.8	3.6	3.5	4.0	4.6	5.1	5.6	1.9	2.1	4.7	5.2
T2 / 03		1.8	3.3	3.7	4.2	4.7	1.6	2.0	2.4	4.8	6.2	6.0	6.9	7.8	8.7	9.5	3.1	3.6	8.1	8.9
T2 / 04		2.7	4.8	5.5	6.2	7.1	2.4	2.9	3.5	7.3	9.7	8.8	10.2	11.7	13.4	15.0	4.7	5.4	12.2	13.4
T2 / 05		3.6	6.3	7.2	8.2	9.3	3.2	3.8	4.6	9.6	12.9	11.7	13.5	15.6	17.7	19.8	6.1	7.0	16.7	18.7
T2 / 06		4.2	7.5	8.6	9.8	11.1	3.7	4.5	5.4	11.4	15.4	13.9	16.1	18.7	21.3	23.6	7.1	8.2	19.5	22.0
T2 / 0X	55	0.56	0.69	0.72	0.74	0.75	0.39	0.44	0.47	0.59	0.62	0.91	0.93	0.95	0.96	0.96	0.84	0.88	1.0	1.0
T2 / 00		0.69	1.1	1.2	1.3	1.4	0.52	0.61	0.70	1.1	1.2	1.6	1.7	1.8	1.9	1.9	1.1	1.3	2.0	2.0
T2 / 01		0.95	1.7	1.9	2.1	2.3	0.74	0.89	1.1	2.0	2.4	2.8	3.1	3.4	3.7	4.0	1.6	1.9	3.7	4.0
T2 / 02		1.1	1.9	2.2	2.6	2.9	0.8	1.0	1.2	2.5	3.4	3.4	3.9	4.5	5.1	5.6	1.9	2.2	4.9	5.5
T2 / 03		1.8	3.3	3.8	4.3	4.9	1.4	1.7	2.1	4.3	5.8	5.8	6.7	7.7	8.7	9.6	3.2	3.7	8.5	9.5
T2 / 04		2.8	4.9	5.6	6.4	7.3	2.2	2.6	3.1	6.5	9.0	8.7	10.0	11.6	13.3	15.1	4.8	5.5	12.5	14.0
T2 / 05		3.6	6.4	7.3	8.4	9.6	2.8	3.4	4.1	8.6	11.9	11.4	13.3	15.4	17.8	20.0	6.3	7.2	17.3	19.6
T2 / 06		4.3	7.5	8.7	10.0	11.4	3.3	4.0	4.8	10.3	14.3	13.6	15.9	18.5	21.3	24.0	7.3	8.4	20.3	23.2

[3] Condensing temperature at bubble point.

Correction factor

Refrigerant	Subcooling [K]										
	2	4	10	15	20	25	30	35	40	45	50
R134a	0.98	1	1.08	1.13	1.19	1.25	1.31	1.37	1.42	1.48	1.54
R404A/R507	0.96	1	1.10	1.20	1.29	1.37	1.46	1.54	1.63	1.70	1.78
R407C	0.97	1	1.08	1.14	1.21	1.27	1.33	1.39	1.45	1.51	1.57
R22	0.98	1	1.06	1.11	1.15	1.20	1.25	1.30	1.35	1.39	1.44

When the subcooling ≠ 4 K then:
Plant capacity / Factor = Table value

Example:
Refrigerant = R407C
Q_{nom} = 10 kW
t_e = 0°C
t_c = 55°C
Δt_{sub} = 25 K

Selection:
10 kW / 1.27 = 7.9 kW → T2, Orifice 04

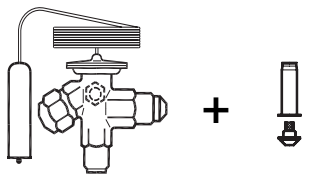

Notes

TE5-55 – Thermostatic expansion valves

Thermostatic expansion valves TE5-55 regulate the injection of refrigerant liquid into evaporators for medium sized plants (rated capacities from 8 kW to 182 kW for R404A/R507). Injection is controlled by the refrigerant superheat. Therefore the valves are especially suitable for liquid injection in "dry" evaporators where the superheat at the evaporator outlet should always be kept constant.

Features

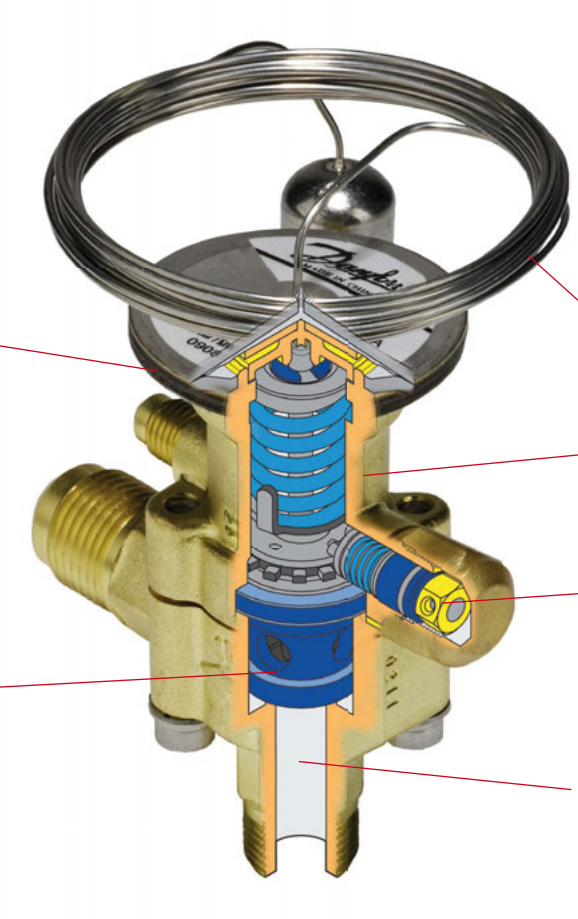

Stainless steel capillary tube and bulb
- high corrosion resistance
- high strength and vibration resistance

Laser-welded power element in stainless steel
- longer diaphragm life
- high pressure tolerance and working pressure
- high corrosion resistance

Large parts program ensures minimal stocks

Easy adjustment of superheat setting

To ensure long operating life, the valve cone and seat are made of a special alloy with particularly good wear qualities.

More connection possibilities
- solder × solder
- flare × flare
- flanges
- straightway or angleway

Applications	Advantages	Facts

· Traditional refrigeration
· Air conditioning units
· Ice cube machines
· Water chillers
	· Interchangeable orifice assembly designed for:
	  · Easy assembly and mounting
	  · Optimised capacity matching
	  · Balanced port (TE55 only)
	· Large temperature range –60 to +10°C
		· Available with MOP (Max. Operating Pressure). Protects the compressor motor against excessive evaporating pressure.
		· Refrigerants: R22, R134a, R404A/R507, R407C
		· Maximum Working Pressure: 28 bar

Technical data and ordering:

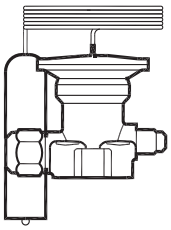

Thermostatic element - including bulb strap **R407C**

Valve type	Pressure equalization	Capillary tube	Code no.	
			Range N –40 to +10°C	
	1/4 in. / 6 mm	m	Without MOP	MOP+15°C
TEZ 5	Ext.	3	067B3278	067B3277
TEZ 12	Ext.	3	067B3366	067B3367
TEZ 20	Ext.	3	067B3371	067B3372
TEZ 55	Ext.	3	067G3240	067G3241

Thermostatic element - including bulb strap **R134a**

Valve type	Pressure equalization	Capillary tube	Code no.		
			Range N –40 to +10°C		Range NM –40 to –5°C
	1/4 in. / 6 mm	m	Without MOP	MOP +15°C	MOP 0°C
TEN 5	Ext.	3	067B3297	067B3298	067B3360
TEN 12	Ext.	3	067B3232	067B3233	-
TEN 12	Ext.	5	067B3363	-	-
TEN 20	Ext.	3	067B3292	067B3293	-
TEN 20	Ext.	5	067B3370	-	-
TEN 55	Ext.	3	067G3222	067G3223	-
TEN 55	Ext.	5	067G3230	-	-

Thermostatic element - including bulb strap **R404A/R507**

Valve type	Pressure equalization	Capillary tube	Code no.					
			Range N–40 to +10°C		Range NM–40 to –5°C	Range NL –40 to –15°C	Range B –60 to –25°C	
	1/4 in. / 6 mm	m	Without MOP	MOP +15°C	MOP 0°C	MOP –10°C	Without MOP	MOP –20°C
TES 5	Ext.	3	067B3342	-	067B3357	067B3358	067B3344	067B3343
TES 12	Ext.	3	067B3347	-	067B3345	067B3348	-	067B3349
TES 12	Ext.	5	067B3346	-	-	-	-	067B3350
TES 20	Ext.	3	067B3352	-	067B3351	067B3353	-	067B3354
TES 20	Ext.	5	067B3356	-	-	-	-	067B3355
TES 55	Ext.	3	067G3302	-	067G3303	067G3304	-	067G3305
TES 55	Ext.	5	067G3301	-	-	-	-	067G3306

Thermostatic element - including bulb strap **R22/R407C**

Valve type	Pressure equalization	Capillary tube	Code no.					
			Range N –40°C to +10°C		Range NM –40 to –5°C	Range NL –40 to –15°C	Range B –60 to –25°C	
	1/4 in. / 6 mm	m	Without MOP	MOP+15°C	MOP 0°C	MOP –10°C	Without MOP	MOP –20°C
TEX 5	Ext	3	067B3250	067B3267	067B3249	067B3253	067B3263	067B3251
TEX 12	Ext.	3	067B3210	067B3227	067B3207	067B3213	-	067B3211
TEX 12	Ext.	5	067B3209	-	-	-	-	067B3212
TEX 20	Ext.	3	067B3274	067B3286	067B3273	067B3275	-	067B3276
TEX 20	Ext.	5	067B3290	-	-	-	-	067B3287
TEX 55	Ext.	3	067G3205	067G3220	067G3206	-	-	067G3207
TEX 55	Ext.	5	067G3209	-	-	-	-	067G3217

Bulb strap (delivered with the element)

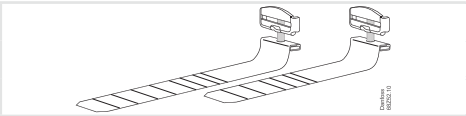

Type	Length	Max. diameter of suction line	Code no.
TE5 and TE12	225 mm	2 1/8 in. (54 mm)	067N0558
TE20 and TE55	350 mm	3 1/8 in. (78 mm)	067N0559

Technical data and ordering:

Orifice assembly

SI N	R134a		R404A/R507		R407C		R22		Orifice no.	Code no.
	kW	TR	kW	TR	kW	TR	kW	TR		
TE5 - 0.5	6.7	1.9	8.1	2.3	10.7	3.1	10.4	3.0	0.5	067B2788
TE5 - 1	12.2	3.5	14.8	4.2	19.6	5.6	19.0	5.4	1	067B2789
TE5 - 2	17.0	4.8	20.4	5.8	27.1	7.7	26.3	7.5	2	067B2790
TE5 - 3	21.8	6.2	26.2	7.5	34.7	9.9	33.8	9.6	3	067B2791
TE5 - 4	29.7	8.5	35.5	10.1	47.3	13.5	45.9	13.1	4	067B2792
TE12 - 5	37.7	10.7	50.0	14.3	56.0	16.0	57.0	16.2	5	067B2708
TE12 - 6	50.0	14.3	64.0	18.2	74.0	21.1	76.0	21.7	6	067B2709
TE12 - 7	66.0	18.8	81.0	23.1	94.0	26.8	98.0	27.9	7	067B2710
TE20 - 8	78.0	22.2	87.0	24.8	117.0	33.3	128.0	36.5	8	067B2771
TE20 - 9	92.0	26.2	101.0	28.8	136.0	38.7	150.0	42.7	9	067B2773
TE55 - 10	111.0	31.6	127.0	36.2	161.0	45.8	168.0	47.9	10	067G2701
TE55 - 11	122.0	34.8	138.0	39.3	175.0	49.9	183.0	52.1	11	067G2704
TE55 - 12	134.0	38.2	151.0	43.0	191.0	54.4	202.0	57.6	12	067G2707
TE55 - 13	166.0	47.3	182.0	51.9	231.0	65.8	245.0	69.8	13	067G2710

The rated capacity is based on:
Evaporating temperature t_e = +4.4 °C
Condensing temperature t_c = +38 °C
Refrigerant temperature ahead of valve t_l = +37 °C

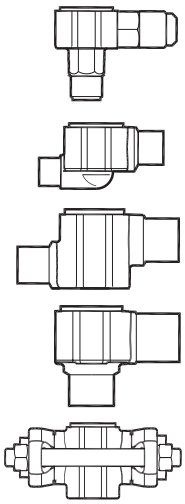

Valve body

Type	Connection Inlet × Outlet		Code no.			
	in.	mm	Flare angleway	Solder angleway	Solder straightway	Solder flanges
TE 5	1/2 × 5/8	-	067B4013	067B4009 1)	067B4007 1)	-
	1/2 × 7/8	-	-	067B4010 1)	067B4008 1)	-
	5/8 × 7/8	-	-	067B4011 1)	067B4032 1)	-
	7/8 × 1 1/8	-	-	067B4034 2)	067B4033 2)	-
TE 5	-	12 × 16	067B4013	067B4004 1)	067B4002 1)	-
	-	12 × 22	-	067B4005 1)	067B4003 1)	-
	-	16 × 22	-	067B4012 1)	067B4035 1)	-
	-	22 × 28	-	067B4037 2)	067B4036 2)	-
TE 12	5/8 × 7/8	-	-	-	-	067B4025 1)
	7/8 × 1	-	-	-	-	067B4026 1)
	7/8 × 1 1/8	-	-	067B4023 2)	067B4021 2)	-
TE 12	-	16 × 22	-	-	-	067B4027 1)
	-	22 × 25	-	-	-	067B4015 1)
	-	22 × 28	-	067B4017 2)	067B4016 2)	-
TE 20	7/8 × 1 1/8	-	-	067B4023 2)	067B4021 2)	-
	-	22 × 28	-	067B4017 2)	067B4016 2)	-
TE 55	1 1/8 × 1 3/8	-	-	067G4004 3)	067G4003 3)	-
	-	28 × 35	-	067G4002 3)	067G4001 3)	-

1) ODF × ODF
2) ODF × ODM
3) ODM × ODM
ODF = Internal diameter
ODM = External diameter

When the subcooling ≠ 4 K then:
Plant capacity / Factor = Table value

Example:
Refrigerant = R404A
Q_{nom} = 10 kW
t_e = -10°C
t_c = 45°C
Dt_{sub} = 25 K

Selection:
10 kW / 1.46 = 6.85 kW → TE5, Orifice 01

Thermostatic element + Orifice + Valve body

Capacities

Capacity in kW, range N -40 °C to +10 °C. Opening superheat sh= 4.4 K

Valve type/ Orifice	Cond. temp.[3] [°C]	R134a					R404A/R507					R407C					R22			
		Capacity in [kW]					Capacity in [kW]					Capacity in [kW]					Capacity in [kW]			
		Evaporating temp. [°C]					Evaporating temp. [°C]					Evaporating temp. [°C]					Evaporating temp. [°C]			
		-30	-10	-5	0	5	-40	-35	-30	-10	0	-10	-5	0	5	10	-35	-30	0	5
TE5 - 0.5	25	3.3	5.0	5.4	5.7	5.8	3.7	4.2	4.8	6.9	7.5	8.6	9.2	9.7	10.0	10.0	5.1	5.7	8.9	8.9
TE5 - 1	25	6.1	9.2	9.8	10.3	10.6	6.8	7.7	8.8	12.7	13.7	15.7	16.8	17.6	18.2	18.2	9.4	10.5	16.2	16.2
TE5 - 2	25	8.6	12.8	13.7	14.4	14.6	9.5	10.9	12.3	17.6	18.8	21.8	23.3	24.4	25.0	24.9	13.2	14.8	22.3	22.2
TE5 - 3	25	11.0	16.5	17.7	18.6	19.0	12.0	13.8	15.6	22.6	24.4	28.1	30.0	31.6	32.4	32.4	16.8	18.8	28.9	28.8
TE5 - 4	25	14.9	22.5	24.2	25.4	25.9	16.1	18.5	21.1	30.8	33.1	38.2	40.9	42.9	44.0	43.7	22.6	25.5	39.3	38.9
TE12 - 5	25	19.3	29.0	31.2	33.0	33.9	20.7	24.2	27.9	43.9	48.9	45.1	49.2	53.0	55.0	56.0	27.7	31.2	51.0	51.0
TE12 - 6	25	25.2	38.4	41.4	43.9	45.2	24.9	29.3	34.1	55.0	62.0	59.0	65.0	70.0	73.0	75.0	35.8	40.5	67.0	68.0
TE12 - 7	25	33.8	52.0	56.0	59.0	61.0	32.5	37.9	43.9	72.0	81.0	78.0	86.0	93.0	98.0	100.0	46.9	53.0	90.0	91.0
TE20 - 8	25	39.1	60.0	64.0	68.0	69.0	35.7	41.8	48.4	75.0	83.0	96.0	104.0	110.0	113.0	1130	62.0	71.0	113.0	112.0
TE20 - 9	25	45.4	72.0	78.0	82.0	85.0	39.5	46.5	54.0	88.0	100.0	112.0	123.0	131.0	137.0	137.0	69.0	80.0	136.0	135.0
TE55 - 10	25	53.0	84.0	92.0	98.0	102.0	46.5	55.0	65.0	108.0	124.0	130.0	142.0	153.0	162.0	166.0	75.0	86.0	150.0	153.0
TE55 - 11	25	59.0	93.0	102.0	109.0	113.0	51.0	61.0	71.0	118.0	136.0	143.0	156.0	168.0	177.0	181.0	83.0	95.0	165.0	167.0
TE55 - 12	25	64.0	103.0	113.0	121.0	126.0	55.0	65.0	77.0	130.0	151.0	156.0	172.0	186.0	197.0	202.0	90.0	103.0	183.0	187.0
TE55 - 13	25	80.0	130.0	142.0	152.0	157.0	67.0	79.0	94.0	159.0	183.0	192.0	211.0	228.0	241.0	246.0	111.0	127.0	225.0	228.0
TE5 - 0.5	35	3.4	5.3	5.9	6.4	6.8	3.5	4.0	4.6	7.1	8.1	8.8	9.6	10.4	11	11.4	5.27	5.93	10.0	10.4
TE5 - 1	35	6.29	9.85	10.8	11.6	12.4	6.3	7.3	8.37	12.9	14.8	16.2	17.7	19.0	20.1	20.9	9.69	10.9	18.4	19.1
TE5 - 2	35	8.83	13.8	15.0	16.2	17.1	8.9	10.3	11.8	18.0	20.4	22.6	24.6	26.4	27.8	28.7	13.6	15.3	25.4	26.2
TE5 - 3	35	11.3	17.6	19.3	20.8	22.1	11.1	12.9	14.8	22.9	26.3	28.8	31.4	33.8	35.7	370	17.1	19.3	32.7	33.9
TE5 - 4	35	15.2	24.0	26.3	28.4	30.1	14.9	17.3	19.9	31.2	35.7	39.1	42.7	46.0	48.6	50.0	22.9	25.9	44.5	45.9
TE12 - 5	35	19.5	30.3	33.3	36.1	38.5	18.6	21.8	25.3	42.3	51.0	44.2	49.2	54.0	58.0	62.0	27.7	31.2	55.0	58.0
TE12 - 6	35	25.1	39.8	43.9	47.8	51.0	22.3	26.3	30.7	53.0	64.0	58.0	64.0	71.0	77.0	82.0	35.4	40.1	74.0	77.0
TE12 - 7	35	33.3	52.0	58.0	63.0	68.0	27.8	32.6	37.9	66.0	81.0	73.0	82.0	92.0	100.0	107.0	45.5	51.0	95.0	101.0
TE20 - 8	35	39.2	62.0	69.0	74.0	79.0	32.4	38.0	44.3	74.0	87.0	96.0	105.0	114.0	122.0	127.0	62.0	70.0	125.0	129.0
TE20 - 9	35	44.4	73.0	81.0	88.0	95.0	34.9	41.1	48.2	84.0	101.0	108.0	120.0	132.0	143.0	151.0	67.0	76.0	146.0	153.0
TE55 - 10	35	51.0	85.0	95.0	105.0	114.0	40.6	48.7	58.0	103.0	126.0	126.0	141.0	155.0	169.0	180.0	72.0	83.0	162.0	172.0
TE55 - 11	35	56.0	94.0	105.0	116.0	126.0	44.2	53.0	63.0	112.0	137.0	138.0	153.0	169.0	184.0	196.0	79.0	91.0	177.0	187.0
TE55 - 12	35	61.0	103.0	116.0	128.0	139.0	47.1	57.0	67.0	121.0	150.0	149.0	167.0	185.0	202.0	216.0	85.0	98.0	194.0	207.0
TE55 - 13	35	75.0	128.0	144.0	159.0	172.0	56.0	68.0	80.0	146.0	181.0	181.0	203.0	225.0	245.0	262.0	103.0	119.0	237.0	251.0
TE5 - 0.5	45	3.4	5.5	6.1	6.7	7.3	3.1	3.6	4.1	6.8	8.0	8.7	9.5	10.4	11.3	12	5.32	5.98	10.6	11.3
TE5 - 1	45	6.3	10.1	11.2	12.3	13.4	5.65	6.6	7.6	12.3	14.7	15.9	17.6	19.2	20.7	22.1	9.76	11.0	19.5	20.7
TE5 - 2	45	8.8	14.1	15.7	17.2	18.6	7.94	9.3	10.7	17.2	20.4	22.4	24.6	26.8	28.9	30.5	13.7	15.4	27.2	28.7
TE5 - 3	45	11.2	17.9	19.9	21.9	23.7	9.85	11.5	13.2	21.6	25.9	28.0	30.9	33.9	36.6	38.9	17.1	19.3	34.5	36.6
TE5 - 4	45	14.9	24.3	27.1	29.8	32.4	13.0	15.3	17.7	29.4	35.4	38.0	42.2	46.3	50.0	53.0	22.7	25.7	47.1	49.9
TE12 - 5	45	19.0	30.0	33.3	36.7	40.1	16.1	18.8	21.9	37.8	47.4	40.9	46.0	51.0	57.0	61.0	27.1	30.3	56.0	60.0
TE12 - 6	45	24.3	39.1	43.7	48.5	53.0	19.0	22.5	26.4	46.9	60.0	53.0	60.0	67.0	75.0	82.0	34.2	38.6	74.0	80.0
TE12 - 7	45	31.7	50.0	56.0	62.0	68.0	23.1	27.0	31.3	56.0	72.0	65.0	73.0	83.0	92.0	102.0	43.3	48.3	92.0	100.0
TE20 - 8	45	38.0	62.0	69.0	76.0	83.0	28.0	32.9	38.4	67.0	83.0	90.0	100.0	111.0	121.0	130.0	60.0	68.0	127.0	136.0
TE20 - 9	45	42.1	70.0	79.0	88.0	97.0	29.5	34.8	40.7	73.0	93.0	97.0	110.0	123.0	137.0	149.0	63.0	71.0	144.0	156.0
TE55 - 10	45	47.4	83.0	94.0	105.0	117.0	33.4	40.5	48.5	91.0	117.0	116.0	131.0	147.0	164.0	179.0	67.0	78.0	163.0	177.0
TE55 - 11	45	52.0	91.0	103.0	115.0	128.0	36.2	43.9	52.0	98.0	126.0	126.0	142.0	160.0	177.0	194.0	74.0	85.0	176.0	192.0
TE55 - 12	45	56.0	98.0	111.0	126.0	140.0	38.2	46.4	56.0	105.0	136.0	135.0	153.0	172.0	192.0	211.0	78.0	90.0	191.0	209.0
TE55 - 13	45	68.0	120.0	137.0	154.0	171.0	44.6	54.0	65.0	125.0	162.0	161.0	183.0	207.0	231.0	253.0	93.0	108.0	231.0	252.0
TE5 - 0.5	55	3.3	5.4	6.1	6.7	7.4	2.6	3.0	3.5	5.8	7.2	8.1	9.0	9.9	10.8	11.7	5.3	5.9	10.7	11.6
TE5 - 1	55	6.1	10.0	11.1	12.4	13.6	4.8	5.6	6.4	10.8	13.3	14.9	16.6	18.3	20.0	21.7	9.7	10.9	19.8	21.3
TE5 - 2	55	8.5	14.0	15.6	17.3	19.0	6.7	7.9	9.1	15.2	18.6	21.1	23.4	25.8	28.1	30.3	13.5	15.3	27.8	29.7
TE5 - 3	55	10.8	17.5	19.6	21.8	24.0	8.2	9.6	11.1	18.7	23.2	25.9	28.8	31.9	35.0	37.9	16.8	18.9	34.6	37.2
TE5 - 4	55	14.3	23.7	26.6	29.6	32.7	10.8	12.7	14.8	25.5	31.9	35.1	39.4	43.8	48.2	52.0	22.1	25.0	47.5	51.0
TE12 - 5	55	18.0	28.3	31.7	35.2	39.0	13.3	15.5	18.0	31.1	39.9	36.0	40.6	45.6	51.0	56.0	26.1	29.0	53.0	58.0
TE12 - 6	55	22.8	36.8	41.4	46.4	52.0	15.5	18.3	21.4	38.4	50.0	46.4	53.0	60.0	67.0	75.0	32.6	36.5	71.0	78.0
TE12 - 7	55	29.4	45.8	51.0	57.0	64.0	18.6	21.6	24.9	43.4	57.0	55.0	62.0	70.0	79.0	88.0	40.8	45.0	84.0	92.0
TE20 - 8	55	35.9	58.0	66.0	73.0	81.0	23.1	27.1	31.5	55.0	71.0	80.0	90.0	100.0	112.0	122.0	57.0	64.0	123.0	134.0
TE20 - 9	55	38.9	64.0	73.0	82.0	92.0	23.8	27.9	32.6	59.0	77.0	84.0	95.0	108.0	121.0	135.0	58.0	66.0	134.0	148.0
TE55 - 10	55	42.6	76.0	87.0	99.0	112.0	25.7	31.5	38.1	74.0	98.0	101.0	116.0	132.0	148.0	165.0	61.0	71.0	155.0	171.0
TE55 - 11	55	46.5	83.0	95.0	108.0	122.0	27.7	33.9	40.9	79.0	105.0	109.0	125.0	142.0	159.0	178.0	66.0	77.0	167.0	184.0
TE55 - 12	55	49.4	89.0	102.0	117.0	132.0	28.9	35.5	42.9	84.0	112.0	116.0	132.0	151.0	170.0	191.0	70.0	81.0	179.0	199.0
TE55 - 13	55	59.0	107.0	123.0	141.0	160.0	33.1	40.9	49.6	98.0	131.0	136.0	156.0	178.0	202.0	227.0	81.0	95.0	213.0	237.0

[3] Condensing temperature at bubble point.

Subcooling correction factor 'f_{sub}'

'f_{sub}' = saturated condensing temp. - liquid temp. at valve inlet

Refrigerant	Subcooling [K]										
	2	4	10	15	20	25	30	35	40	45	50
R134a	0.97	1.00	1.09	1.16	1.23	1.30	1.37	1.44	1.51	1.58	1.65
R404A/R507	0.97	1.00	1.10	1.19	1.27	1.35	1.43	1.52	1.60	1.68	1.76
R407C	0.97	1.00	1.08	1.15	1.22	1.29	1.36	1.43	1.50	1.57	1.64
R22	0.98	1.00	1.07	1.13	1.19	1.25	1.30	1.36	1.42	1.47	1.53

TUA/TUAE/TCAE – Thermostatic expansion valves

Thermostatic expansion valves regulate the injection of liquid refrigerant into evaporators. Injection is controlled by the refrigerant superheat. Therefore the valves are especially suitable for liquid injection in "dry" evaporators where the superheat at the evaporator outlet should always be kept constant.

Features

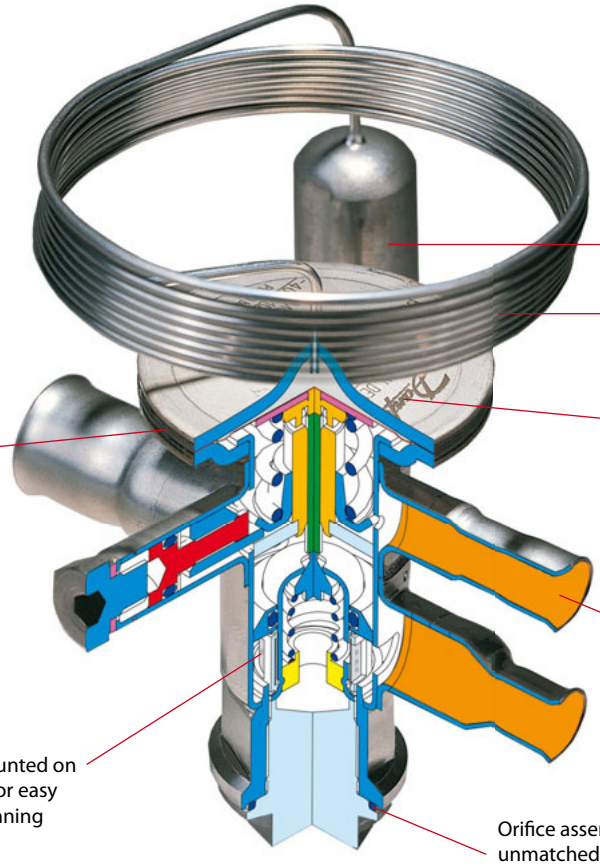

Applications	Advantages	Facts
· Traditional refrigeration · Heat pump systems · Air conditioning units · Liquid coolers · Ice cube machines · Transport refrigeration	· The use of stainless steel makes the valves light and strong. · Bi-metal connections for safe, fast and convenient soldering. · Stainless steel capillary tube for superior strength and ductility. · Allen key superheat setting screw is convenient and space-saving compared to the standard screwdriver adjustment used in most conventional valves.	· Can be supplied with MOP (Max. Operating Pressure) Protects the compressor motor against excessive evaporating pressure during normal operation. · Valves for special temperature ranges can be supplied. · Only 4 K opening superheat. · Bi-flow function.

Technical data and ordering: TUA/TUAE

Thermostatic element, without orifice or strainer, with bulb strap [1]

Refrigerant	Type	Pressure equalization	Connections Inlet × outlet		Code no.				
					Range N −40 to +10°C		Range NM −40 to −5°C	Range B −60 to −25°C	
			in.	mm	Without MOP	MOP +15°C	MOP 0°C	Without MOP	MOP −20°C
R22/R407C	TUA	Int.	1/4 × 1/2		068U2234	-	-	-	-
	TUA	Int.		6 × 12	068U2230	-	-	-	-
	TUA	Int.	3/8 × 1/2		068U2235	-	-	-	-
	TUA	Int.		10 × 12	068U2231	-	-	-	-
	TUAE	Ext. 1/4 in.	1/4 × 1/2		068U2236	-	-	-	-
	TUAE	Ext. 6 mm		6 × 12	-	-	-	-	-
	TUAE	Ext. 1/4 in.	3/8 × 1/2		068U2237	068U2245	-	-	-
	TUAE	Ext. 6 mm		10 × 12	068U2233	068U2241	-	-	-
R134a	TUA	Int.	1/4 × 1/2		068U2204	068U2212	-	-	-
	TUA	Int.		6 × 12	068U2200	068U2208	-	-	-
	TUA	Int.	3/8 × 1/2		068U2205	068U2213	-	-	-
	TUA	Int.		10 × 12	068U2201	-	-	-	-
	TUAE	Ext. 1/4 in.	1/4 × 1/2		068U2206	068U2214	-	-	-
	TUAE	Ext. 6 mm		6 × 12	068U2202	-	-	-	-
	TUAE	Ext. 1/4 in.	3/8 × 1/2		068U2207	068U2215	-	-	-
	TUAE	Ext. 6 mm		10 × 12	068U2203	068U2211	-	-	-
R404A/R507	TUA	Int.	1/4 × 1/2		068U2284	068U2292	068U2300	068U2308	068U2316
	TUA	Int.		6 × 12	068U2280	-	068U2296	-	068U2312
	TUA	Int.	3/8 × 1/2		068U2285	068U2293	-	068U2309	068U2317
	TUA	Int.		10 × 12	068U2281	-	-	-	-
	TUAE	Ext. 1/4 in.	1/4 × 1/2		068U2286	-	-	-	068U2318
	TUAE	Ext. 6 mm		6 × 12	068U2282	-	-	-	-
	TUAE	Ext. 1/4 in.	3/8 × 1/2		068U2287	068U2295	068U2303	-	068U2319
	TUAE	Ext. 6 mm		10 × 12	068U2283	-	068U2299	-	068U2315
R407C	TUA	Int.	1/4 × 1/2		068U2324	068U2332	-	-	-
	TUA	Int.		6 × 12	068U2320	-	-	-	-
	TUA	Int.	3/8 × 1/2		068U2325	068U2333	-	-	-
	TUA	Int.		10 × 12	068U2321	-	-	-	-
	TUAE	Ext. 1/4 in.	1/4 × 1/2		068U2326	-	-	-	-
	TUAE	Ext. 6 mm		6 × 12	068U2322	068U2330	-	-	-
	TUAE	Ext. 1/4 in.	3/8 × 1/2		068U2327	068U2335	-	-	-
	TUAE	Ext. 6 mm		10 × 12	068U2323	068U2331	-	-	-
R410A	TUA	Int.	3/8 × 1/2		068U2414	-	-	-	-
	TUAE	Ext. 1/4 in.	3/8 × 1/2		068U1714	-	-	-	-
	TUAE	Ext. 6 mm		10 × 12	068U2780	-	-	-	-

Orifice assembly with filter and gasket

Valve type/ Orifice	R134a		R404A/R507		R407C		R22		R410A		Code no.
	kW	TR	kW	TR	kW	TR	kW	TR	kW	TR	
TU Orif. 0	0.42	0.12	0.48	0.14	0.66	0.19	0.63	0.18	0.99	0.28	068U1030
TU Orif. 1	0.61	0.18	0.71	0.20	0.94	0.27	0.92	0.26	1.3	0.38	068U1031
TU Orif. 2	0.72	0.21	0.87	0.25	1.1	0.32	1.1	0.32	1.7	0.48	068U1032
TU Orif. 3	0.94	0.27	1.1	0.32	1.5	0.42	1.4	0.41	2.1	0.60	068U1033
TU Orif. 4	1.6	0.46	2.0	0.57	2.5	0.72	2.5	0.72	4.1	1.2	068U1034
TU Orif. 5	2.1	0.61	2.7	0.76	3.4	0.96	3.4	0.96	5.3	1.5	068U1035
TU Orif. 6	3.4	0.95	4.2	1.1	5.3	1.5	5.3	1.5	8.5	2.4	068U1036
TU Orif. 7	4.4	1.3	5.6	1.6	7.0	2.0	7.0	2.0	11.2	3.2	068U1037
TU Orif. 8	6.5	1.9	8.0	2.3	10.2	2.9	10.1	2.9	15.8	4.5	068U1038
TU Orif. 9*)	9.0	2.6	11.3	3.2	14.0	4.0	14.1	4.0	23.1	6.6	068U1039

[1] Capillary tube length 1.5 m.
[2] The rated capacity is based on: Evaporating temperature t_e = +4.4 °C for range N, condensing temperature t_c = +38 °C, refrigerant temperature ahead of valve t_l = +37 °C, and opening superheat OS = 4 K.
[3] For R407C plants, please select valves from the dedicated R407C program
*) TUAE with orifice no. 9 cannot be used for Biflow operation

Bulb strap (delivered with the valve) and Accessories

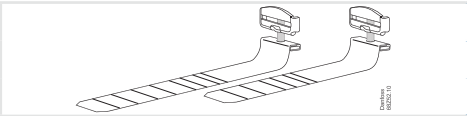

Type	Length	Max. diameter of suction line	Code no.
TUA / TUAE Accessories	110 mm	1 1/8" (28 mm)	068U3507
	190 mm	2" (50 mm)	067N3508

Technical data and ordering: TCAE

Thermostatic element, without orifice or strainer, with bulb strap [3]

Refrigerant	Type	Pressure equalization	Connection Inlet × outlet		Code no.				
					Range N −40 to +10°C		Range NM −40 to −5°C	Range B −60 to −25°C	
			in.	mm	Without MOP	With MOP	MOP 0°C	Without MOP	With MOP
R22/R407C	TCAE	1/4 in..	3/8 × 5/8	-	068U4280	-	-	-	-
	TCAE	1/4 in.	1/2 × 5/8	-	068U4281	068U4283	-	-	-
	TCAE	6 mm	-	10 × 16	-	-	-	-	-
	TCAE	6 mm	-	12 × 16	-	-	068U4291	-	-
R134a	TCAE	1/4 in.	3/8 × 5/8	-	068U4292	-	-	-	-
	TCAE	1/4 in.	1/2 × 5/8	-	068U4293	068U4295	-	-	-
	TCAE	6 mm	-	10 × 16	068U4296	-	-	-	-
	TCAE	6 mm	-	12 × 16	068U4297	068U4299	-	-	-
R404A/R507	TCAE	1/4 in.	3/8 × 5/8	-	068U4304	-	-	-	-
	TCAE	1/4 in.	1/2 × 5/8	-	068U4305	068U4307	068U4313	068U4317	068U4319
	TCAE	6 mm	-	10 × 16	068U4308	068U4310	068U4314	-	068U4322
	TCAE	6 mm	-	12 × 16	068U4309	-	068U4315	068U4321	068U4323
R407C	TCAE	1/4 in..	3/8 × 5/8	-	068U4324	068U4326	-	-	-
	TCAE	1/4 in.	1/2 × 5/8	-	068U4325	068U4327	-	-	-
	TCAE	6 mm	-	10 × 16	068U4328	-	-	-	-
	TCAE	6 mm	-	12 × 16	068U4329	068U4331	-	-	-
R410A	TCAE	1/4 in.	3/8 × 5/8	-	068U4336	-	-	-	-
	TCAE	1/4 in.	1/2 × 5/8	-	068U4337	068U4339	-	-	-
	TCAE	6 mm	-	10 × 16	-	-	-	-	-
	TCAE	6 mm	-	12 × 16	068U4341	068U4343	-	-	-

Orifice assembly with filter and gasket

SI N	R134a		R404A/R507		R407C		R22		R410A		Code no.	
	kW	TR	kW	TR	kW	TR	kW	TR	kW	TR	Without bleed	With 15% bleed
TC Orif. 1	13.0	3.7	13.0	3.7	17.8	5.1	18.3	5.2	21.2	6.0	068U4100	068U4097
TC Orif. 2	14.9	4.3	15.1	4.3	20.4	5.8	21.2	6.0	24.5	7.0	068U4101	068U4098
TC Orif. 3	18.6	5.3	18.9	5.4	25.2	7.2	26.7	7.6	30.6	8.7	068U4102	068U4099

[3] Capillary tube length 1.5 m.
[4] The rated capacity is based on: Evaporating temperature t_e = +4.4 °C, condensing temperature t_c = +38 °C, refrigerant temperature ahead of valve t_l = +37 °C, and opening superheat OS = 4 K.
[5] TCAE with orifice no. 3 cannot be used for biflow operation.
[6] For R407C plants, please select valves from the dedicated R407C program

Bulb strap (delivered with the valve) and Accessories

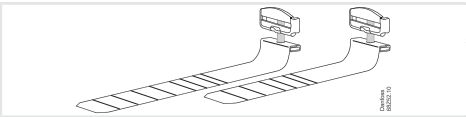

Type	Length	Max. diameter of suction line	Code no.
TCAE Accessories	110 mm	1 1/8" (28 mm)	068U3507
	190 mm	2" (50 mm)	067N3508

Capacities

Capacity in kW, range N -40 °C to +10 °C. Opening superheat sh= 4.4 K

Valve type/ Orifice	Cond. temp.[3] [°C]	R134a					R404A/R507					R407C					R22				R410A				
		Capacity in [kW]					Capacity in [kW]					Capacity in [kW]					Capacity in [kW]				Capacity in [kW]				
		Evaporating temp. [°C]					Evaporating temp. [°C]					Evaporating temp. [°C]					Evaporating temp. [°C]				Evaporating temp. [°C]				
		-30	-10	-5	0	5	-40	-35	-30	-10	0	-10	-5	0	5	10	-35	-30	0	5	-10	-5	0	5	10
TU Orif. 0	25	0.18	0.29	0.32	0.35	0.36	0.17	0.20	0.24	0.39	0.44	0.49	0.54	0.58	0.60	0.62	0.27	0.30	0.53	0.54	0.81	0.86	0.87	0.86	0.80
TU Orif. 1	25	0.26	0.43	0.47	0.51	0.51	0.26	0.30	0.35	0.57	0.64	0.71	0.78	0.83	0.87	0.88	0.39	0.45	0.77	0.78	1.1	1.2	1.1	1.2	1.1
TU Orif. 2	25	0.29	0.49	0.54	0.59	0.62	0.28	0.33	0.39	0.66	0.77	0.82	0.91	0.98	1.0	1.1	0.43	0.50	0.91	0.94	1.3	1.4	1.5	1.5	1.4
TU Orif. 3	25	0.40	0.66	0.72	0.78	0.82	0.39	0.45	0.53	0.87	1.0	1.1	1.2	1.1	1.3	1.4	0.59	0.68	1.2	1.2	1.7	1.8	1.9	1.9	1.8
TU Orif. 4	25	0.62	1.1	1.2	1.3	1.4	0.61	0.72	0.84	1.5	1.8	1.8	2.0	2.2	2.4	2.5	0.93	1.1	2.1	2.3	2.9	3.2	3.4	3.6	3.5
TU Orif. 5	25	0.84	1.4	1.6	1.7	1.9	0.81	0.96	1.1	2.0	2.4	2.4	2.7	2.9	3.2	3.3	1.3	1.4	2.8	2.9	3.9	4.3	4.6	4.7	4.6
TU Orif. 6	25	1.3	2.2	2.5	2.7	2.9	1.3	1.5	1.8	3.1	3.7	3.8	4.2	4.6	5.0	5.2	1.9	2.2	4.3	4.5	6.1	6.7	7.2	7.5	7.4
TU Orif. 7	25	1.7	2.9	3.3	3.6	3.9	1.7	2.0	2.3	4.1	4.9	5.0	5.5	6.1	6.6	6.9	2.6	3.0	5.7	6.0	8.1	8.9	9.5	9.8	9.6
TU Orif. 8	25	2.6	4.7	4.9	5.3	5.7	2.5	2.9	3.4	6.0	7.1	7.4	8.2	8.9	9.5	9.9	3.8	4.4	8.3	8.7	11.8	12.8	13.6	13.9	13.3
TU Orif. 9	25	3.6	6.0	6.7	7.4	7.9	3.3	3.9	4.6	8.2	10.0	10.0	11.1	12.3	13.4	14.2	5.1	5.8	11.6	12.3	16.3	18.1	19.6	20.5	20.1
TC Orif. 1	25	7.5	10.4	10.9	11.2	11.2	6.3	7.2	8.1	11.4	12.0	14.7	15.5	16.1	16.3	16.1	10.2	11.4	15.7	15.4	18.4	19.0	19.1	18.7	17.5
TC Orif. 2	25	8.2	11.7	12.3	12.8	12.8	6.8	7.8	8.9	13.0	13.9	16.6	17.6	18.4	18.8	18.6	11.2	12.5	18.1	17.8	20.8	21.7	22.0	21.7	20.4
TC Orif. 3	25	9.6	14.3	15.2	15.9	16.1	7.8	9.1	10.5	16.0	17.5	20.2	21.7	22.9	23.6	23.6	13.0	14.7	22.8	22.6	25.5	26.9	27.6	27.4	26.0
TU Orif. 0	35	0.18	0.32	0.35	0.39	0.42	0.16	0.19	0.23	0.40	0.48	0.52	0.57	0.63	0.67	0.71	0.28	0.32	0.60	0.63	0.86	0.93	0.98	1.0	1.0
TU Orif. 1	35	0.27	0.46	0.52	0.57	0.62	0.24	0.29	0.34	0.58	0.70	0.74	0.82	0.90	0.96	1.0	0.40	0.46	0.88	0.93	1.1	1.2	1.3	1.4	1.4
TU Orif. 2	35	0.30	0.53	0.60	0.66	0.73	0.27	0.32	0.38	0.68	0.84	0.85	0.96	1.1	1.2	1.2	0.45	0.52	1.0	1.1	1.4	1.5	1.6	1.7	1.8
TU Orif. 3	35	0.41	0.71	0.79	0.88	0.96	0.36	0.43	0.51	0.90	1.1	1.1	1.3	1.4	1.5	1.6	0.61	0.70	1.4	1.4	1.8	1.9	2.1	2.2	2.2
TU Orif. 4	35	0.65	1.2	1.3	1.5	1.6	0.57	0.68	0.81	1.5	1.9	1.9	2.1	2.4	2.6	2.9	0.97	1.1	2.3	2.5	3.1	3.5	3.8	4.2	4.3
TU Orif. 5	35	0.87	1.5	1.8	2.0	2.2	0.77	0.92	1.1	2.0	2.6	2.5	2.8	3.2	3.5	3.8	1.3	1.5	3.1	3.4	4.1	4.6	5.1	5.5	5.7
TU Orif. 6	35	1.4	2.4	2.7	3.1	3.4	1.2	1.4	1.7	3.1	4.0	3.9	4.4	4.9	5.5	6.0	2.0	2.3	4.9	5.3	6.4	7.3	8.1	8.8	9.2
TU Orif. 7	35	1.8	3.2	3.6	4.1	4.5	1.6	1.9	2.2	4.2	5.3	5.2	5.8	6.5	7.2	7.9	2.7	3.1	6.5	7.0	8.5	9.6	10.6	11.5	11.9
TU Orif. 8	35	2.7	4.7	5.3	6.0	6.6	2.3	2.8	3.3	6.1	7.7	7.6	8.6	9.6	10.5	11.4	4.0	4.6	9.4	10.2	12.4	13.8	15.2	16.2	16.6
TU Orif. 9	35	3.7	6.4	7.3	8.2	9.2	3.1	3.7	4.4	8.3	10.7	10.2	11.6	13.1	14.6	16.1	5.3	6.1	13.0	14.3	16.9	19.3	21.7	23.8	25.1
TC Orif. 1	35	7.7	11.2	12.0	12.6	13.1	5.9	6.8	7.8	11.7	13.2	15.4	16.5	17.4	18.2	18.6	10.6	11.8	18.0	18.2	19.4	20.4	21.2	21.6	21.5
TC Orif. 2	35	8.4	12.6	13.6	14.4	15.1	6.3	7.4	8.5	13.3	15.2	17.2	18.6	19.9	20.9	21.5	11.5	12.9	20.7	21.2	21.8	23.3	24.4	25.0	25.0
TC Orif. 3	35	9.8	15.2	16.6	17.8	18.8	7.2	8.5	9.8	16.1	18.9	20.6	22.6	24.4	26.0	27.0	13.2	15.0	25.9	26.7	26.4	28.5	30.2	31.4	31.7
TU Orif. 0	45	0.18	0.33	0.37	0.41	0.46	0.15	0.18	0.21	0.38	0.47	0.52	0.58	0.64	0.70	0.76	0.28	0.32	0.64	0.69	0.86	0.94	1.0	1.1	1.1
TU Orif. 1	45	0.27	0.48	0.54	0.61	0.67	0.22	0.26	0.31	0.56	0.70	0.74	0.82	0.91	1.0	1.1	0.41	0.47	0.94	1.0	1.1	1.3	1.4	1.4	1.5
TU Orif. 2	45	0.30	0.54	0.62	0.70	0.79	0.24	0.29	0.34	0.65	0.84	0.85	0.96	1.1	1.2	1.3	0.46	0.53	1.1	1.2	1.4	1.5	1.7	1.8	1.9
TU Orif. 3	45	0.41	0.73	0.83	0.93	1.0	0.33	0.39	0.46	0.86	1.1	1.1	1.3	1.4	1.6	1.7	0.62	0.72	1.5	1.6	1.8	2.0	2.1	2.3	2.4
TU Orif. 4	45	0.65	1.2	1.4	1.6	1.8	0.52	0.62	0.74	1.4	1.9	1.9	2.1	2.4	2.7	3.0	0.99	1.1	2.5	2.8	3.1	3.5	4.0	4.4	4.7
TU Orif. 5	45	0.87	1.6	1.8	2.1	2.4	0.69	0.83	1.0	1.9	2.5	2.5	2.8	3.2	3.6	4.0	1.3	1.5	3.3	3.7	4.1	4.7	5.3	5.8	6.2
TU Orif. 6	45	1.4	2.5	2.8	3.2	3.7	1.1	1.3	1.5	3.0	4.0	3.9	4.4	5.0	5.6	6.3	2.1	2.4	5.2	5.8	6.4	7.3	8.3	9.2	10.0
TU Orif. 7	45	1.8	3.3	3.8	4.3	4.9	1.4	1.7	2.0	3.9	5.2	5.1	5.8	6.6	7.4	8.3	2.7	3.2	6.9	7.6	8.4	9.7	10.9	12.1	13.0
TU Orif. 8	45	2.7	4.8	5.5	6.3	7.1	2.1	2.5	3.0	5.8	7.6	7.5	8.5	9.7	10.8	12.0	4.0	4.6	10.0	11.1	12.3	13.9	15.6	17.1	18.2
TU Orif. 9	45	3.8	6.6	7.6	8.7	9.8	2.8	3.4	4.0	7.8	10.4	10.0	11.5	13.1	14.8	16.6	5.5	6.3	13.7	15.3	16.6	19.1	21.9	24.8	27.2
TC Orif. 1	45	7.7	11.6	12.6	13.5	14.3	5.3	6.2	7.1	11.3	13.2	15.4	16.7	17.9	19.0	19.9	10.7	12.0	19.4	20.1	19.3	20.6	21.8	22.7	23.2
TC Orif. 2	45	8.3	13.0	14.2	15.4	16.4	5.6	6.6	7.7	12.7	15.1	17.1	18.7	20.3	21.8	22.9	11.5	13.0	22.2	23.2	21.6	23.3	24.9	26.2	27.0
TC Orif. 3	45	9.6	15.4	17.1	18.7	20.2	6.3	7.5	8.8	15.1	18.6	20.1	22.4	24.6	26.7	28.5	13.1	14.9	27.4	29.0	25.6	28.1	30.4	32.5	34.0
TU Orif. 0	55	0.18	0.32	0.37	0.42	0.47	0.12	0.15	0.18	0.34	0.43	0.50	0.56	0.63	0.69	0.76	0.28	0.32	0.66	0.72	0.81	0.89	0.97	1.0	1.1
TU Orif. 1	55	0.27	0.48	0.54	0.62	0.69	0.18	0.22	0.26	0.49	0.63	0.70	0.79	0.88	0.98	1.1	0.41	0.47	0.96	1.1	1.1	1.2	1.3	1.4	1.5
TU Orif. 2	55	0.30	0.54	0.62	0.71	0.81	0.20	0.25	0.29	0.57	0.76	0.81	0.92	1.1	1.2	1.3	0.46	0.53	1.1	1.3	1.3	1.5	1.6	1.8	1.9
TU Orif. 3	55	0.40	0.72	0.83	0.95	1.1	0.28	0.33	0.40	0.76	0.98	1.1	1.2	1.4	1.5	1.7	0.60	0.71	1.5	1.6	1.7	1.9	2.0	2.2	2.3
TU Orif. 4	55	0.64	1.2	1.4	1.6	1.8	0.44	0.53	0.66	1.3	1.7	1.8	2.0	2.3	2.6	3.0	0.99	1.1	2.6	2.9	2.9	3.3	3.8	4.2	4.6
TU Orif. 5	55	0.86	1.6	1.8	2.1	2.4	0.59	0.71	0.86	1.7	2.3	2.4	2.7	3.1	3.5	4.0	1.3	1.5	3.4	3.8	3.9	4.5	5.0	5.6	6.1
TU Orif. 6	55	1.4	2.5	2.8	3.3	3.8	0.93	1.1	1.3	2.6	3.6	3.7	4.2	4.8	5.5	6.2	2.1	2.4	5.3	6.0	6.1	6.9	7.9	8.9	9.7
TU Orif. 7	55	1.8	3.3	3.8	4.3	5.0	1.2	1.5	1.8	3.5	4.7	4.9	5.6	6.4	7.2	8.1	2.8	3.2	7.0	7.9	8.0	9.2	10.4	11.6	12.7
TU Orif. 8	55	2.6	4.8	5.5	6.4	7.3	1.8	2.2	2.6	5.1	6.9	7.1	8.1	9.3	10.5	11.8	4.0	4.6	10.2	11.4	11.6	13.2	14.9	16.5	17.8
TU Orif. 9	55	3.8	6.6	7.5	8.7	9.9	2.4	2.9	3.4	6.8	9.3	9.4	10.8	12.4	14.2	16.1	5.5	6.3	13.8	15.6	15.4	17.8	20.4	23.3	25.9
TC Orif. 1	55	7.5	11.6	12.7	13.8	14.8	4.4	5.3	6.1	10.1	12.1	14.7	16.1	17.5	18.7	19.8	10.7	12.0	20.0	21.0	18.4	19.7	21.0	22.0	22.8
TC Orif. 2	55	8.1	12.9	14.2	15.6	16.9	4.7	5.6	6.6	11.2	13.8	16.2	17.9	19.7	21.3	22.8	11.4	12.9	22.8	24.2	20.3	22.1	23.8	25.3	26.4
TC Orif. 3	55	9.2	15.1	16.8	18.7	20.5	5.2	6.2	7.4	13.1	16.6	18.7	20.9	23.3	25.7	27.9	12.7	14.5	27.7	29.8	23.7	26.1	28.5	30.8	32.8

[3] Condensing temperature at bubble point.

Correction factor

Refrigerant	Subcooling [K]										
	2	4	10	15	20	25	30	35	40	45	50
R22	0.98	1	1.06	1.11	1.15	1.20	1.25	1.30	1.35	1.39	1.44
R134a	0.98	1	1.08	1.13	1.19	1.25	1.31	1.37	1.42	1.48	1.54
R404A / R507	0.96	1	1.10	1.20	1.29	1.37	1.46	1.54	1.63	1.70	1.78
R407C	0.97	1	1.08	1.14	1.21	1.27	1.33	1.39	1.45	1.51	1.57
R410A	0.97	1	1.08	1.15	1.21	1.27	1.33	1.39	1.45	1.50	1.56

When the subcooling ≠ 4 K then:
Plant capacity / Factor = Table value

Example:
Refrigerant = R134a
Q_{nom} = 8 kW
t_e = –10 °C
t_c = 55 °C
Δt_{sub} = 25 K

Selection:
8 kW / 1.25 = 6.4 kW → TU, Orifice 09

T U A E

Thermostatic
Capacity range
Orifice / Superheat
Ext. equalization

Orifice / Superheat		
	Interchangeable	Adjustable
A	Yes	YES
B	NO	YES
C	NO	NO

N = –40°C → +10 °C
NM = –40°C → –5 °C with MOP
NL = –40°C → –15 °C with MOP
B = –60°C → –25 °C with MOP

TUA(E)
TCAE

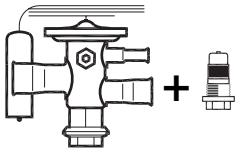

Thermostatic valve Orifice

TUB(E)
TUC(E)
TCBE
TCCE

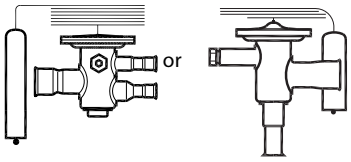

Thermostatic valve incl. orifice

Valve types TUB(E)/TUC(E) and TCBE/TCCE can be replaced by TUA(E) and TCAE types

Notes

TUB/TUBE – Thermostatic expansion valves

The TUB / TUBE serie is delivered with fixed orifice. The thermostatic expansion valves has been developed for soldering into hermetic refrigeration systems.
TU valves are made of stainless steel and are therefore very suitable for use in the food industry.

Features

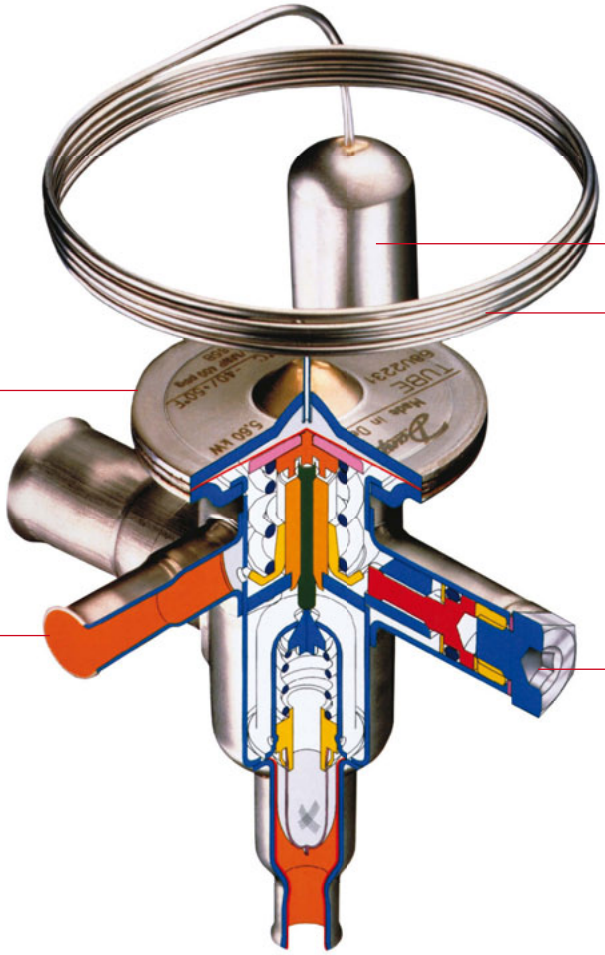

Capillary tube and bulb in stainless steel. Extremly strong and corrosion resistant.

Laser welded stainless steel thermostatic element for unsurpassed joint strength and operational lifetime

Bi-metal connections Stainless steel with rolled on copper cladding for safe, fast and convenient copper-to-copper soldering

Allen key superheat setting screw is convenient and space-saving compared to the standard screwdriver adjustment used in most conventional valves

Applications	Advantages	Facts
· Traditional refrigeration · Heat pump systems · Air conditioning units · Liquid coolers · Ice cube machines · Transport refrigeration	· The use of stainless steel makes the valves light and strong. · Bi-metal connections for safe, fast and convenient soldering. · Stainless steel capillary tube for superior strength and ductility.	· Can be supplied with MOP (Max. Operating Pressure) Protects the compressor motor against excessive evaporating pressure during normal operation. · Valves for special temperature ranges can be supplied. · Only 4 K opening superheat. · Bi-flow function.

Technical data and ordering

Ordering
Angleway
Supplied with bulb strap
Standard valve range

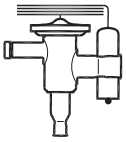

Range N = –40 → +10°C

R22/R407C, R407C, R410A, R134a

Refrigerant	Type	Orifice no.[2]	Rated capacity $Q_{nom.}$[1]		Pressure equalisation	Connection Inlet × Outlet			
			kW	TR		in.	Code no.	mm	Code no.
R22/ R407C [3]	TUB	1	**0.92**	**0.26**	int.	1/4 × 1/2	068U2057	-	-
	TUB	2	**1.1**	**0.32**	int.	1/4 × 1/2	068U2058	-	-
	TUB	3	**1.4**	**0.41**	int.	1/4 × 1/2	068U2059	-	-
	TUB	4	**2.5**	**0.72**	int.	1/4 × 1/2	068U2060	-	-
	TUB	5	**3.4**	**0.96**	int.	1/4 × 1/2	068U2061	-	-
	TUB	6	**5.3**	**1.5**	int.	1/4 × 1/2	068U2062	-	-
	TUB	7	**7.0**	**2.0**	int.	3/8 × 1/2	068U2063	-	-
	TUB	8	**10.1**	**2.9**	int.	3/8 × 1/2	068U2064	-	-
	TUBE	5	**3.4**	**0.96**	ext.	1/4 × 1/2	068U2071	-	-
	TUBE	6	**5.3**	**1.5**	ext.	1/4 × 1/2	068U2072	-	-
	TUBE	7	**7.0**	**2.0**	ext.	3/8 × 1/2	068U2073	-	-
	TUBE	8	**10.1**	**2.9**	ext.	3/8 × 1/2	068U2074	-	-
	TUBE	9	**14.1**	**4.0**	ext.	3/8 × 1/2	068U2075	-	-
R407C	TUB	1	**0.94**	**0.27**	int.	-	-	6 × 12	068U1901
	TUB	2	**1.1**	**0.32**	int.	-	-	6 × 12	-
	TUB	3	**1.5**	**0.42**	int.	-	-	6 × 12	068U1903
	TUB	4	**2.5**	**0.72**	int.	-	-	6 × 12	068U1904
	TUB	5	**3.4**	**0.96**	int.	-	-	6 × 12	068U1905
	TUB	6	**5.3**	**1.5**	int.	-	-	6 × 12	068U1906
	TUB	7	**7.0**	**2.0**	int.	-	-	10 × 12	068U1907
	TUB	8	**10.2**	**2.9**	int.	-	-	10 × 12	068U1908
	TUB	9	**14.0**	**4.0**	int.	-	-	10 × 12	068U1909
	TUBE	1	**0.94**	**0.27**	ext.	-	-	6 × 12	-
	TUBE	2	**1.1**	**0.32**	ext.	-	-	6 × 12	068U1912
	TUBE	3	**1.5**	**0.42**	ext.	-	-	6 × 12	068U1913
	TUBE	4	**2.5**	**0.72**	ext.	-	-	6 × 12	068U1914
	TUBE	5	**3.4**	**0.96**	ext.	1/4 × 1/2	068U1935	6 × 12	068U1915
	TUBE	6	**5.3**	**1.5**	ext.	1/4 × 1/2	068U1936	6 × 12	068U1916
	TUBE	7	**7.0**	**2.0**	ext.	3/8 × 1/2	068U1937	10 × 12	068U1917
	TUBE	8	**10.2**	**2.9**	ext.	3/8 × 1/2	068U1938	10 × 12	068U1918
	TUBE	9	**14.0**	**4.0**	ext.	3/8 × 1/2	068U1939	10 × 12	068U1919
R410A	TUB	1	**1.34**	**0.38**	int.	1/4 × 1/2	068U1958	-	-
	TUB	2	**1.7**	**0.48**	int.	1/4 × 1/2	068U1959	-	-
	TUB	3	**2.1**	**0.60**	int.	1/4 × 1/2	068U1960	-	-
	TUB	4	**4.1**	**1.2**	int.	1/4 × 1/2	068U1961	-	-
	TUB	5	**5.3**	**1.5**	int.	1/4 × 1/2	068U1962	-	-
	TUB	6	**8.5**	**2.4**	int.	1/4 × 1/2	068U1963	-	-
	TUBE	7	**11.2**	**3.2**	ext.	3/8 × 1/2	068U1973	-	-
	TUBE	8	**15.8**	**4.5**	ext.	3/8 × 1/2	068U1974	-	-
	TUBE	9	**23.1**	**6.6**	ext.	3/8 × 1/2	068U1975	-	-
R134a	TUB	0	**0.42**	**0.12**	int.	1/4 × 1/2	068U2660	-	-
	TUB	1	**0.61**	**0.17**	int.	1/4 × 1/2	068U2027	6 × 12	068U2000
	TUB	2	**0.72**	**0.20**	int.	1/4 × 1/2	068U2028	6 × 12	068U2001
	TUB	3	**0.95**	**0.27**	int.	1/4 × 1/2	068U2029	6 × 12	068U2002
	TUB	4	**1.6**	**0.46**	int.	1/4 × 1/2	068U2030	6 × 12	068U2003
	TUB	5	**2.1**	**0.61**	int.	1/4 × 1/2	068U2031	6 × 12	068U2004
	TUB	6	**3.4**	**0.95**	int.	1/4 × 1/2	068U2032	6 × 12	068U2005
	TUBE	1	**0.61**	**0.17**	ext.	-	-	6 × 12	068U2009
	TUBE	2	**0.72**	**0.20**	ext.	-	-	6 × 12	068U2010
	TUBE	3	**0.95**	**0.27**	ext.	1/4 × 1/2	068U2020	6 × 12	068U2011
	TUBE	4	**1.6**	**0.46**	ext.	1/4 × 1/2	068U2021	6 × 12	068U2012
	TUBE	5	**2.1**	**0.61**	ext.	1/4 × 1/2	068U2022	6 × 12	068U2013
	TUBE	6	**3.4**	**0.95**	ext.	1/4 × 1/2	068U2023	6 × 12	068U2014
	TUBE	7	**4.4**	**1.3**	ext.	3/8 × 1/2	068U2024	10 × 12	068U2015
	TUBE	8	**6.5**	**1.9**	ext.	3/8 × 1/2	068U2025	10 × 12	068U2016
	TUBE	9	**9.0**	**2.6**	ext.	3/8 × 1/2	068U2026	10 × 12	068U2017

Valves with inch connections have 1/4 in. pressure equalisation.
Valves with mm connections have 6 mm pressure equalisation.

[1] Rated capacity $Q_{nom.}$ is based on:
Evaporating temperature
t_e = +4.4 °C
Condensing temperature
t_c = +38 °C
Refrigerant liquid temperature
t_l = +37 °C
Opening superheat
OS = 4 K

[2] TUBE with orifice 0 and 9 and all TUB (internal pressure equalisation) cannot be used for biflow operation.

[3] For R407C plants, please select valves from the dedicated R407C program

[4] Capillary tube length 0.8 m

Ordering
Angleway
Supplied with bulb strap
Standard valve range

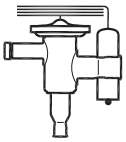

[1] Rated capacity $Q_{nom.}$ is based on:
Evaporating temperature
t_e = +4.4 °C
Condensing temperature
t_c = +38 °C
Refrigerant liquid temperature
t_l = +37 °C
Opening superheat
OS = 4 K

[2] TUBE with orifice 0 and 9 and all TUB (internal pressure equalisation) cannot be used for biflow operation.

[3] Capillary tube length 0.8 m

Range N = –40 → +10°C

R404A/R507

Refrigerant	Type	Orifice no.[2]	Rated capacity $Q_{nom.}$[1]		Pressure equalisation	Connection Inlet × Outlet			
			kW	TR		in.	Code no.	mm	Code no.
R404A R507	TUB	1	**0.71**	**0.20**	int.	1/4 × 1/2	068U2094	6 × 12	068U2076
	TUB	2	**0.87**	**0.25**	int.	1/4 × 1/2	068U2095	6 × 12	068U2077
	TUB	3	**1.1**	**0.32**	int.	1/4 × 1/2	068U2096	6 × 12	068U2078
	TUB	4	**2.0**	**0.57**	int.	1/4 × 1/2	068U2097	6 × 12	068U2079
	TUB	5	**2.7**	**0.76**	int.	1/4 × 1/2	068U2098	6 × 12	068U2080
	TUB	6	**4.2**	**1.2**	int.	1/4 × 1/2	068U2099	-	-
	TUBE	1	**0.71**	**0.20**	ext.	1/4 × 1/2	068U2103	6 × 12	068U2085
	TUBE	2	**0.87**	**0.25**	ext.	1/4 × 1/2	068U2104	6 × 12	068U2086
	TUBE	3	**1.1**	**0.32**	ext.	1/4 × 1/2	068U2105	6 × 12	068U2087
	TUBE	4	**2.0**	**0.57**	ext.	1/4 × 1/2	068U2106	6 × 12	068U2088
	TUBE	5	**2.7**	**0.76**	ext.	1/4 × 1/2	068U2107	6 × 12	068U2089
	TUBE	6	**4.2**	**1.2**	ext.	1/4 × 1/2	068U2108	6 × 12	068U2090
	TUBE	7	**5.6**	**1.6**	ext.	3/8 × 1/2	068U2109	10 × 12	068U2091
	TUBE	8	**8.0**	**2.3**	ext.	3/8 × 1/2	068U2110	10 × 12	068U2092
	TUBE	9	**11.3**	**3.2**	ext.	3/8 × 1/2	068U2111	10 × 12	068U2093

Valves with inch connections have ¼ in. pressure equalisation.
Valves with mm connections have 6 mm pressure equalisation.

When the subcooling ≠ 4 K then:
Plant capacity / Factor = Table value

Example:
Refrigerant = R134a
Q_{nom} = 8 kW
t_e = –10°C
t_c = 55°C
Δt_{sub} = 25 K

Selection:
8 kW / 1.25 = 6.4 kW → TU, Orifice 09

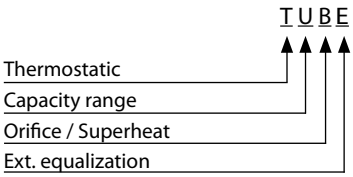

	Orifice / Superheat	
	Interchangeable	Adjustable
A	Yes	YES
B	NO	YES
C	NO	NO

N = –40°C → +10°C
NM = –40°C → –5°C with MOP
NL = –40°C → –15°C with MOP
B = –60°C → –25°C with MOP

TUA(E)
TCAE

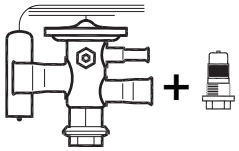

Thermostatic valve Orifice

TUB(E)
TUC(E)
TCBE
TCCE

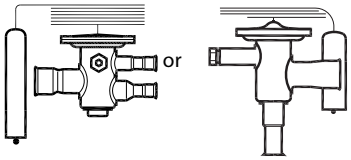

Thermostatic valve incl. orifice

Valve types TUB(E)/TUC(E) and TCBE/TCCE can be replaced by TUA(E) and TCAE types

Capacities

Capacity in kW, range N -40 °C to +10 °C. Opening superheat sh= 4.4 K

Valve type/ Orifice	Cond. temp.[3] [°C]	R134a					R404A/R507					R407C					R22				R410A				
		Capacity in [kW]					Capacity in [kW]					Capacity in [kW]					Capacity in [kW]				Capacity in [kW]				
		Evaporating temp. [°C]					Evaporating temp. [°C]					Evaporating temp. [°C]					Evaporating temp. [°C]				Evaporating temp. [°C]				
		-30	-10	-5	0	5	-40	-35	-30	-10	0	-10	-5	0	5	10	-35	-30	0	5	-10	-5	0	5	10
TU Orif. 0X	25	0.14	0.23	0.25	0.27	0.28	0.14	0.16	0.19	0.30	0.34	0.39	0.42	0.45	0.46	0.47	0.21	0.24	0.41	0.41	0.62	0.65	0.65	0.64	0.59
TU Orif. 0	25	0.18	0.29	0.32	0.35	0.36	0.17	0.20	0.24	0.39	0.44	0.49	0.54	0.58	0.60	0.62	0.27	0.30	0.53	0.54	0.81	0.86	0.87	0.86	0.80
TU Orif. 1	25	0.26	0.43	0.47	0.51	0.51	0.26	0.30	0.35	0.57	0.64	0.71	0.78	0.83	0.87	0.88	0.39	0.45	0.77	0.78	1.1	1.2	1.1	1.2	1.1
TU Orif. 2	25	0.29	0.49	0.54	0.59	0.62	0.28	0.33	0.39	0.66	0.77	0.82	0.91	0.98	1.0	1.1	0.43	0.50	0.91	0.94	1.3	1.4	1.5	1.5	1.4
TU Orif. 3	25	0.40	0.66	0.72	0.78	0.82	0.39	0.45	0.53	0.87	1.0	1.1	1.2	1.1	1.3	1.4	0.59	0.68	1.2	1.2	1.7	1.8	1.9	1.9	1.8
TU Orif. 4	25	0.62	1.1	1.2	1.3	1.4	0.61	0.72	0.84	1.5	1.8	1.8	2.0	2.2	2.4	2.5	0.93	1.1	2.1	2.3	2.9	3.2	3.4	3.6	3.5
TU Orif. 5	25	0.84	1.4	1.6	1.7	1.9	0.81	0.96	1.1	2.0	2.4	2.4	2.7	2.9	3.2	3.3	1.3	1.4	2.8	2.9	3.9	4.3	4.6	4.7	4.6
TU Orif. 6	25	1.3	2.2	2.5	2.7	2.9	1.3	1.5	1.8	3.1	3.7	3.8	4.2	4.6	5.0	5.2	1.9	2.2	4.3	4.5	6.1	6.7	7.2	7.5	7.4
TU Orif. 7	25	1.7	2.9	3.3	3.6	3.9	1.7	2.0	2.3	4.1	4.9	5.0	5.5	6.1	6.6	6.9	2.6	3.0	5.7	6.0	8.1	8.9	9.5	9.8	9.6
TU Orif. 8	25	2.6	4.7	4.9	5.3	5.7	2.5	2.9	3.4	6.0	7.1	7.4	8.2	8.9	9.5	9.9	3.8	4.4	8.3	8.7	11.8	12.8	13.6	13.9	13.3
TU Orif. 9	25	3.6	6.0	6.7	7.4	7.9	3.3	3.9	4.6	8.2	10.0	10.0	11.1	12.3	13.4	14.2	5.1	5.8	11.6	12.3	16.3	18.1	19.6	20.5	20.1
TU Orif. 0X	35	0.15	0.25	0.28	0.30	0.33	0.13	0.16	0.18	0.31	0.36	0.40	0.44	0.48	0.52	0.54	0.22	0.25	0.46	0.49	0.65	0.70	0.73	0.75	0.74
TU Orif. 0	35	0.18	0.32	0.35	0.39	0.42	0.16	0.19	0.23	0.40	0.48	0.52	0.57	0.63	0.67	0.71	0.28	0.32	0.60	0.63	0.86	0.93	0.98	1.0	1.0
TU Orif. 1	35	0.27	0.46	0.52	0.57	0.62	0.24	0.29	0.34	0.58	0.70	0.74	0.82	0.90	0.96	1.0	0.40	0.46	0.88	0.93	1.1	1.2	1.3	1.4	1.4
TU Orif. 2	35	0.30	0.53	0.60	0.66	0.73	0.27	0.32	0.38	0.68	0.84	0.85	0.96	1.1	1.2	1.2	0.45	0.52	1.0	1.1	1.4	1.5	1.6	1.7	1.8
TU Orif. 3	35	0.41	0.71	0.79	0.88	0.96	0.36	0.43	0.51	0.90	1.1	1.1	1.3	1.4	1.5	1.6	0.61	0.70	1.4	1.4	1.8	1.9	2.1	2.2	2.2
TU Orif. 4	35	0.65	1.2	1.3	1.5	1.6	0.57	0.68	0.81	1.5	1.9	1.9	2.1	2.4	2.6	2.9	0.97	1.1	2.3	2.5	3.1	3.5	3.8	4.2	4.3
TU Orif. 5	35	0.87	1.5	1.8	2.0	2.2	0.77	0.92	1.1	2.0	2.6	2.5	2.8	3.2	3.5	3.8	1.3	1.5	3.1	3.4	4.1	4.6	5.1	5.5	5.7
TU Orif. 6	35	1.4	2.4	2.7	3.1	3.4	1.2	1.4	1.7	3.1	4.0	3.9	4.4	4.9	5.5	6.0	2.0	2.3	4.9	5.3	6.4	7.3	8.1	8.8	9.2
TU Orif. 7	35	1.8	3.2	3.6	4.1	4.5	1.6	1.9	2.2	4.2	5.3	5.2	5.8	6.5	7.2	7.9	2.7	3.1	6.5	7.0	8.5	9.6	10.6	11.5	11.9
TU Orif. 8	35	2.7	4.7	5.3	6.0	6.6	2.3	2.8	3.3	6.1	7.7	7.6	8.6	9.6	10.5	11.4	4.0	4.6	9.4	10.2	12.4	13.8	15.2	16.2	16.6
TU Orif. 9	35	3.7	6.4	7.3	8.2	9.2	3.1	3.7	4.4	8.3	10.7	10.2	11.6	13.1	14.6	16.1	5.3	6.1	13.0	14.3	16.9	19.3	21.7	23.8	25.1
TU Orif. 0X	45	0.15	0.26	0.29	0.32	0.36	0.12	0.14	0.17	0.29	0.36	0.40	0.45	0.50	0.54	0.58	0.22	0.25	0.49	0.53	0.65	0.71	0.76	0.79	0.80
TU Orif. 0	45	0.18	0.33	0.37	0.41	0.46	0.15	0.18	0.21	0.38	0.47	0.52	0.58	0.64	0.70	0.76	0.28	0.32	0.64	0.69	0.86	0.94	1.0	1.1	1.1
TU Orif. 1	45	0.27	0.48	0.54	0.61	0.67	0.22	0.26	0.31	0.56	0.70	0.74	0.82	0.91	1.0	1.1	0.41	0.47	0.94	1.0	1.1	1.3	1.4	1.4	1.5
TU Orif. 2	45	0.30	0.54	0.62	0.70	0.79	0.24	0.29	0.34	0.65	0.84	0.85	0.96	1.1	1.2	1.3	0.46	0.53	1.1	1.2	1.4	1.5	1.7	1.8	1.9
TU Orif. 3	45	0.41	0.73	0.83	0.93	1.0	0.33	0.39	0.46	0.86	1.1	1.1	1.3	1.4	1.6	1.7	0.62	0.72	1.5	1.6	1.8	2.0	2.1	2.3	2.4
TU Orif. 4	45	0.65	1.2	1.4	1.6	1.8	0.52	0.62	0.74	1.4	1.9	1.9	2.1	2.4	2.7	3.0	0.99	1.1	2.5	2.8	3.1	3.5	4.0	4.4	4.7
TU Orif. 5	45	0.87	1.6	1.8	2.1	2.4	0.69	0.83	1.0	1.9	2.5	2.5	2.8	3.2	3.6	4.0	1.3	1.5	3.3	3.7	4.1	4.7	5.3	5.8	6.2
TU Orif. 6	45	1.4	2.5	2.8	3.2	3.7	1.1	1.3	1.5	3.0	4.0	3.9	4.4	5.0	5.6	6.3	2.1	2.4	5.2	5.8	6.4	7.3	8.3	9.2	10.0
TU Orif. 7	45	1.8	3.3	3.8	4.3	4.9	1.4	1.7	2.0	3.9	5.2	5.1	5.8	6.6	7.4	8.3	2.7	3.2	6.9	7.6	8.4	9.7	10.9	12.1	13.0
TU Orif. 8	45	2.7	4.8	5.5	6.3	7.1	2.1	2.5	3.0	5.8	7.6	7.5	8.5	9.7	10.8	12.0	4.0	4.6	10.0	11.1	12.3	13.9	15.6	17.1	18.2
TU Orif. 9	45	3.8	6.6	7.6	8.7	9.8	2.8	3.4	4.0	7.8	10.4	10.0	11.5	13.1	14.8	16.6	5.5	6.3	13.7	15.3	16.6	19.1	21.9	24.8	27.2
TU Orif. 0X	55	0.14	0.25	0.29	0.33	0.37	0.10	0.12	0.14	0.26	0.33	0.39	0.44	0.49	0.53	0.58	0.22	0.25	0.51	0.55	0.61	0.67	0.72	0.76	0.79
TU Orif. 0	55	0.18	0.32	0.37	0.42	0.47	0.12	0.15	0.18	0.34	0.43	0.50	0.56	0.63	0.69	0.76	0.28	0.32	0.66	0.72	0.81	0.89	0.97	1.0	1.1
TU Orif. 1	55	0.27	0.48	0.54	0.62	0.69	0.18	0.22	0.26	0.49	0.63	0.70	0.79	0.88	0.98	1.1	0.41	0.47	0.96	1.1	1.1	1.2	1.3	1.4	1.5
TU Orif. 2	55	0.30	0.54	0.62	0.71	0.81	0.20	0.25	0.29	0.57	0.76	0.81	0.92	1.1	1.2	1.3	0.46	0.53	1.1	1.3	1.3	1.5	1.6	1.8	1.9
TU Orif. 3	55	0.40	0.72	0.83	0.95	1.1	0.28	0.33	0.40	0.76	0.98	1.1	1.2	1.4	1.5	1.7	0.60	0.71	1.5	1.6	1.7	1.9	2.0	2.2	2.3
TU Orif. 4	55	0.64	1.2	1.4	1.6	1.8	0.44	0.53	0.66	1.3	1.7	1.8	2.0	2.3	2.6	3.0	0.99	1.1	2.6	2.9	2.9	3.3	3.8	4.2	4.6
TU Orif. 5	55	0.86	1.6	1.8	2.1	2.4	0.59	0.71	0.86	1.7	2.3	2.4	2.7	3.1	3.5	4.0	1.3	1.5	3.4	3.8	3.9	4.5	5.0	5.6	6.1
TU Orif. 6	55	1.4	2.5	2.8	3.3	3.8	0.93	1.1	1.3	2.6	3.6	3.7	4.2	4.8	5.5	6.2	2.1	2.4	5.3	6.0	6.1	6.9	7.9	8.9	9.7
TU Orif. 7	55	1.8	3.3	3.8	4.3	5.0	1.2	1.5	1.8	3.5	4.7	4.9	5.6	6.4	7.2	8.1	2.8	3.2	7.0	7.9	8.0	9.2	10.4	11.6	12.7
TU Orif. 8	55	2.6	4.8	5.5	6.4	7.3	1.8	2.2	2.6	5.1	6.9	7.1	8.1	9.3	10.5	11.8	4.0	4.6	10.2	11.4	11.6	13.2	14.9	16.5	17.8
TU Orif. 9	55	3.8	6.6	7.5	8.7	9.9	2.4	2.9	3.4	6.8	9.3	9.4	10.8	12.4	14.2	16.1	5.5	6.3	13.8	15.6	15.4	17.8	20.4	23.3	25.9

[3] Condensing temperature at bubble point.

Correction factor

Refrigerant	Subcooling [K]										
	2	4	10	15	20	25	30	35	40	45	50
R22	0.98	1	1.06	1.11	1.15	1.20	1.25	1.30	1.35	1.39	1.44
R134a	0.98	1	1.08	1.13	1.19	1.25	1.31	1.37	1.42	1.48	1.54
R404A / R507	0.96	1	1.10	1.20	1.29	1.37	1.46	1.54	1.63	1.70	1.78
R407C	0.97	1	1.08	1.14	1.21	1.27	1.33	1.39	1.45	1.51	1.57
R410A	0.97	1	1.08	1.15	1.21	1.27	1.33	1.39	1.45	1.50	1.56

PHT – Thermostatic expansion valves

PHT thermostatic expansion valves regulate the injection of refrigerant liquid into evaporators. Injection is controlled by the refrigerant superheat.
Therefore the valves are especially suitable for liquid injection in "dry" evaporators where the superheat at the evaporator outlet is proportional to the evaporator load should always be kept constant.

Features

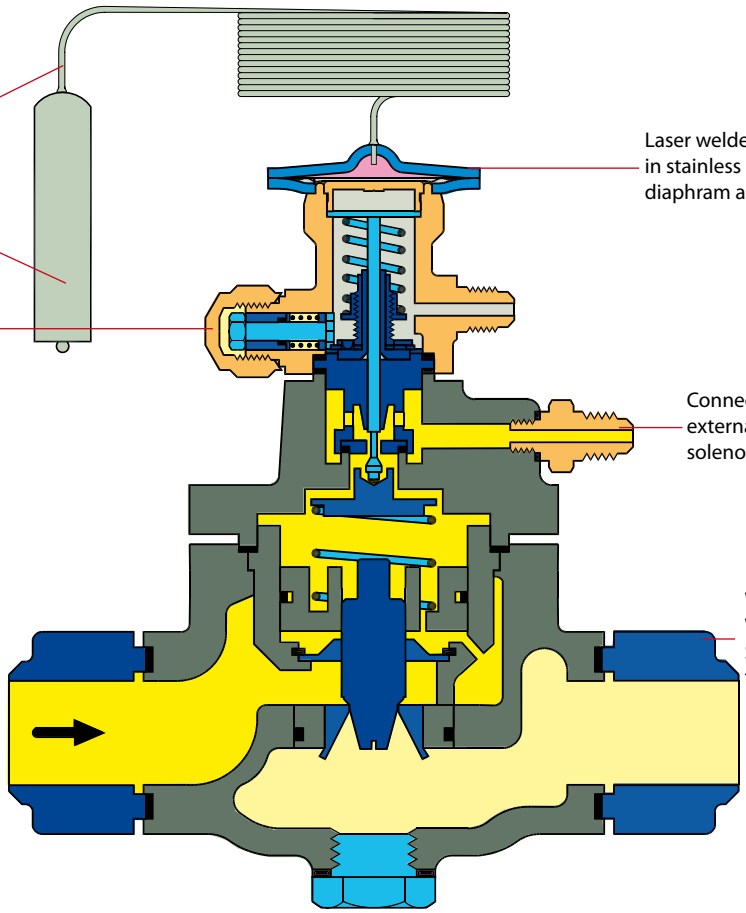

Applications	Advantages	Facts
· Traditional refrigeration and freezing applications · Water coolers and air conditioning	· *Interchangeable orifice assembly* - easier stocking - easy capacity matching - better service. · *Very tight main orifice* Also used as solenoid valve (not PHT 300) · *Superheat* Static superheat SS can be adjusted with setting spindle.	· *Maximum working pressure* - PHT 85 and 125: PS / MWP = 28 bar - PHT 300: PS / MWP = 20 bar · *Rated capacities from 113 to 1944 kW* (32 to 554 TR) for R22 · Can *be supplied with MOP* (Max. Operating Pressure) Protects the compressor motor against excessive evaporating pressure · *Range*: –40 to +50°C

Technical data and ordering

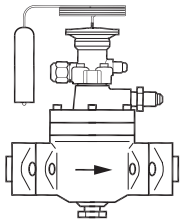

PHT 85
Solder or weld flanges

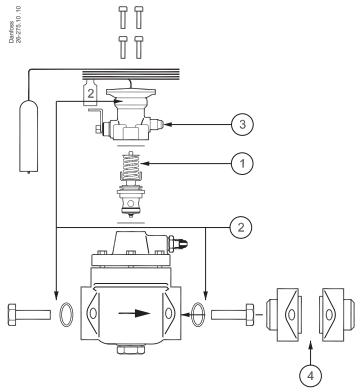

1. Orifice assembly for pilot valve
2. Valve body, flange gaskets, flange bolts and screws
3. Thermostatic element (incl. accessory bag)
4. Flange set

1. Pilot orifice assembly

Type	Code no.
PHT	067B2790

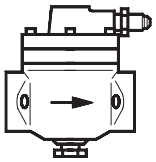

2. Valve body, flange gaskets, flange bolts and screws

SI N	R134a		R404A/R507		R407C		R22		Code no.
	kW	TR	kW	TR	kW	TR	kW	TR	
PHT85-1	61.0	17.4	98.0	27.9	118.0	33.6	113.0	32.2	026H1160
PHT85-2	103.0	29.3	152.0	43.3	188.0	53.6	181.0	51.6	026H1161
PHT85-3	159.0	45.3	244.0	69.5	299.0	85.2	288.0	82.1	026H1162
PHT85-4	212.0	60.4	418.0	119.1	498.0	141.9	481.0	137.0	026H1163
PHT125-1	479.0	136.5	647.0	184.3	820.0	233.6	780.0	222.2	026H1164
PHT300-1	676.0	192.6	1005.0	286.3	1237.0	352.4	1199.0	341.6	026H1165
PHT300-2	1154.0	328.8	1583.0	451.0	2002.0	570.4	1944.0	553.8	026H1166

The rated capacity is based on:
Evaporating temperature t_e = +4.4 °C
Condensing temperature t_c = +38 °C
Refrigerant temperature ahead of valve t_l = +37 °C

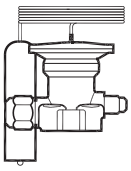

3. Thermostatic element (incl. accessory bag)

Range	Refrigerant	Code no.	
		3 m capillary tube	5 m capillary tube
–40 to +10°C	R22/R407C	067B3303	067B3304
	R22/R407C, MOP 100 psig	067B3300	067B3306
	R407C	067B3314	067B3341
	R407C, MOP 95 psig	067B3311	
	R134a	067B3310	067B3315
	R134a, MOP 55 psig	067B3316	067B3317
	R404A / R507		067B3319
+10 to +50°C	R134a		067B3318

4. Flange set

Valve flange	Flange type	Weld flanges		Solder flanges			
		in.	Code no.	in.	Code no.	mm	Code no.
PHT 85	2	1	027N1025				
PHT 85	2			$1^1/_8$	027L1029	28	027L1028
PHT 85	2			$1^3/_8$	027L1035	35	027L1035
PHT 125	3 A	$1^1/_4$	027N1032				
PHT 300	4 A	$1^1/_2$	027N1040				
PHT 300	4 A	2	027N1050				

Capacities

Capacity in kW, range N -40 °C to +10 °C. Opening superheat sh= 4.4 K

Valve type/ Orifice	Cond. temp.[3] [°C]	R134a Capacity in [kW] Evaporating temp. [°C]					R404A/R507 Capacity in [kW] Evaporating temp. [°C]					R407C Capacity in [kW] Evaporating temp. [°C]					R22 Capacity in [kW] Evaporating temp. [°C]			
		-30	-10	-5	0	5	-40	-35	-30	-10	0	-10	-5	0	5	10	-35	-30	0	5
PHT85-1	25	17.7	38.2	43.2	47.6	50.0	34.2	40.4	47.1	76.0	87.0	85.0	94.0	101.0	107.0	111.0	41.7	48.6	90.0	93.0
PHT85-2	25	31.4	67.0	75.0	82.0	86.0	60.0	70.0	81.0	125.0	139.0	143.0	156.0	166.0	174.0	177.0	73.0	84.0	149.0	151.0
PHT85-3	25	46.4	100.0	113.0	124.0	131.0	90.0	105.0	122.0	194.0	221.0	220.0	242.0	261.0	277.0	285.0	110.0	128.0	234.0	240.0
PHT85-4	25	52.0	108.0	127.0	149.0	171.0	97.0	112.0	139.0	301.0	372.0	317.0	371.0	422.0	464.0	492.0	109.0	128.0	377.0	403.0
PHT125-1	25	160.0	321.0	359.0	390.0	410.0	284.0	325.0	372.0	564.0	616.0	654.0	699.0	729.0	738.0	718.0	357.0	407.0	653.0	642.0
PHT300-1	25	223.0	444.0	498.0	546.0	579.0	393.0	456.0	524.0	812.0	924.0	929.0	1018.0	1098.0	1163.0	1202.0	482.0	552.0	993.0	1024.0
PHT300-2	25	410.0	786.0	875.0	950.0	1000.0	695.0	800.0	909.0	1338.0	1483.0	1571.0	1700.0	1810.0	1889.0	1925.0	863.0	979.0	1640.0	1669.0
PHT85-1	35	19.6	42.9	49.4	56.0	61.0	32.8	39.3	46.5	79.0	95.0	91.0	101.0	111.0	121.0	129.0	45.1	53.0	105.0	112.0
PHT85-2	35	34.4	75.0	86.0	96.0	104.0	57.0	68.0	80.0	130.0	151.0	152.0	168.0	181.0	194.0	203.0	79.0	92.0	173.0	181.0
PHT85-3	35	51.0	113.0	130.0	146.0	160.0	87.0	103.0	121.0	201.0	239.0	234.0	260.0	285.0	307.0	327.0	119.0	139.0	271.0	288.0
PHT85-4	35	58.0	125.0	150.0	180.0	215.0	93.0	111.0	140.0	316.0	404.0	341.0	401.0	460.0	514.0	560.0	121.0	144.0	438.0	483.0
PHT125-1	35	173.0	356.0	403.0	447.0	485.0	272.0	316.0	367.0	581.0	657.0	697.0	756.0	803.0	834.0	842.0	379.0	436.0	759.0	772.0
PHT300-1	35	244.0	494.0	561.0	626.0	684.0	381.0	447.0	518.0	836.0	989.0	981.0	1084.0	1184.0	1276.0	1355.0	521.0	598.0	1134.0	1204.0
PHT300-2	35	448.0	871.0	980.0	1082.0	1170.0	677.0	786.0	901.0	1378.0	1581.0	1659.0	1808.0	1944.0	2063.0	2156.0	934.0	1063.0	1865.0	1952.0
PHT85-1	45	20.7	45.8	53.0	61.0	68.0	28.7	35.3	42.7	77.0	96.0	93.0	104.0	115.0	127.0	137.0	47.1	55.0	116.0	125.0
PHT85-2	45	35.8	80.0	92.0	104.0	115.0	51.0	62.0	74.0	127.0	151.0	155.0	172.0	187.0	202.0	214.0	83.0	97.0	188.0	200.0
PHT85-3	45	53.0	120.0	139.0	158.0	176.0	77.0	93.0	111.0	196.0	239.0	238.0	266.0	293.0	320.0	345.0	125.0	146.0	295.0	318.0
PHT85-4	45	61.0	134.0	163.0	199.0	241.0	81.0	99.0	129.0	311.0	406.0	350.0	413.0	476.0	535.0	588.0	129.0	155.0	477.0	532.0
PHT125-1	45	179.0	375.0	428.0	480.0	527.0	240.0	287.0	339.0	565.0	653.0	712.0	782.0	842.0	889.0	918.0	384.0	447.0	837.0	870.0
PHT300-1	45	255.0	523.0	598.0	673.0	746.0	342.0	408.0	480.0	810.0	981.0	994.0	1104.0	1213.0	1317.0	1415.0	548.0	630.0	1223.0	1314.0
PHT300-2	45	468.0	920.0	1041.0	1158.0	1266.0	616.0	725.0	843.0	1339.0	1570.0	1680.0	1838.0	1986.0	2122.0	2240.0	984.0	1121.0	2006.0	2122.0
PHT85-1	55	21.0	47.2	55.0	63.0	72.0	21.9	28.4	35.7	71.0	91.0	91.0	103.0	115.0	127.0	139.0	47.7	56.0	122.0	133.0
PHT85-2	55	35.5	82.0	95.0	108.0	121.0	40.0	51.0	63.0	117.0	143.0	152.0	169.0	186.0	201.0	215.0	84.0	99.0	197.0	212.0
PHT85-3	55	51.0	121.0	142.0	162.0	183.0	59.0	76.0	94.0	179.0	225.0	233.0	261.0	290.0	318.0	346.0	127.0	149.0	308.0	334.0
PHT85-4	55	61.0	137.0	169.0	207.0	253.0	59.0	77.0	107.0	288.0	385.0	345.0	409.0	472.0	533.0	589.0	134.0	162.0	500.0	559.0
PHT125-1	55	176.0	380.0	437.0	492.0	546.0	190.0	237.0	290.0	522.0	615.0	701.0	781.0	852.0	911.0	955.0	372.0	443.0	891.0	939.0
PHT300-1	55	252.0	531.0	611.0	692.0	772.0	275.0	339.0	410.0	738.0	916.0	972.0	1084.0	1195.0	1305.0	1409.0	561.0	647.0	1272.0	1375.0
PHT300-2	55	466.0	933.0	1061.0	1186.0	1305.0	510.0	618.0	734.0	1231.0	1471.0	1641.0	1800.0	1951.0	2091.0	2216.0	1010.0	1152.0	2081.0	2211.0

[3] Condensing temperature at bubble point.

Correction factor

Refrigerant	Subcooling [K] 2	4	10	15	20	25	30	35	40	45	50
R22	0.98	1	1.06	1.11	1.15	1.2	1.25	1.3	1.35	1.39	1.44
R134a	0.98	1	1.08	1.13	1.19	1.25	1.31	1.37	1.42	1.48	1.54
R404A	0.96	1	1.1	1.2	1.29	1.37	1.46	1.54	1.63	1.7	1.78
R407C	0.97	1	1.08	1.14	1.21	1.27	1.33	1.39	1.45	1.51	1.57

When the subcooling ≠ 4 K then:
1. Table value × Factor = Plant capacity
2. Plant capacity/Factor = Table value

Example:
Refrigerant = R134a
Q_o = 130 kW
t_o = -10 °C
t_c = 45 °C
Δt_u = 25 K

Selection:
130 kW : 1.25 = 104 kW = PHT 85, Orifice 03 ✓

Product overview
Complete Danfoss program of thermostatic expansion valves:

Thermostatic Expansion valves with exchangeable orifice

Type	Rated capacities in kW for range N					Connections
	R22	R134a	R404A / R507	R407C	R410A	
T 2 / TE 2	0.9 - 19.7	0.7 - 10.1	0.64 - 15.5	0.9 - 19.7	-	Flare x flare and flare × solder Solder (solder adaptor) × solder
TUA / TUAE	0.63 - 14.1	0.42 - 9.0	0.5 - 11.3	0.66 - 14.0	1.0 - 23.1	Solder - Bi-metal (stainless steel / copper)
TCAE	18.3 - 26.7	13 - 18.6	13 - 18.9	17.8 - 25.2	21.2 - 30.6	Solder - Bi-metal (stainless steel / copper)
TE 5 - TE 55	19.7 - 356	12.9 - 220	13 - 197	21.3 - 385	-	Flare / solder /solder flanges
PHT	105 - 1890	55 - 1083	99 - 1623	117 - 2020	-	Solder or weld flanges

Thermostatic Expansion valves with fixed orifice

Type	Rated capacities in kW for range N					Connections
	R22	R134a	R404A / R507	R407C	R410A	
TUB / TUBE	0.63 - 14.9	0.42 - 9.0	0.5 - 11.3	0.66 - 14.0	1.0 - 23.1	Solder Bi-metal (stainless steel / copper)
TCBE	18.3 - 26.7	13 - 18.6	13 - 18.9	17.8 - .2	21.2 30.6	Solder Bi-metal (stainless steel / copper)
TGE	10 - 134	6 - 87	7 - 92	9 - 121	12 - 161	Flare / solder (copper)
TRE 10 - TRE 80	28 - 245	18 - 196	21 - 187	28 - 245	28 - 350	Solder Bi-metal (stainless steel / copper)

Thermostatic expansion valves parts program:

T 2 and TE 2

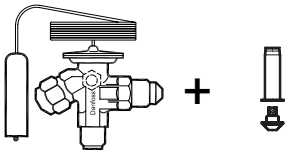

Thermostatic valve + Orifice

TUA/TUAE and TCAE

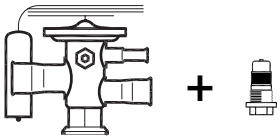

Thermostatic valve + Orifice

TE 5 - TE 55

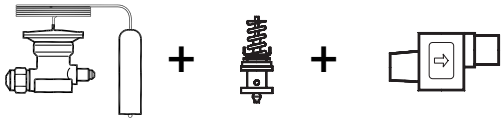

Thermostatic element + Orifice + Valve body

PHT

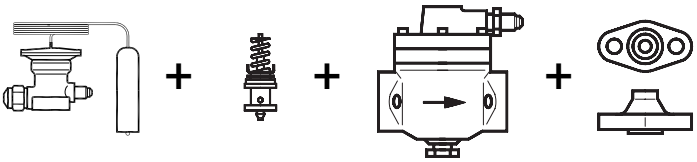

Thermostatic element + Orifice + Valve body + Flanges

Thermostatic expansion valves – PHT overview

AKV – Electronically operated expansion valves

AKV are electrically operated expansion valves designed for refrigerating plant.
The AKV valves are normally operated by a controller from the Danfoss ADAP-KOOL® range.
The valves are operated in pulse-width modulation. This means that the valve is either completly open or completly closed.

Features

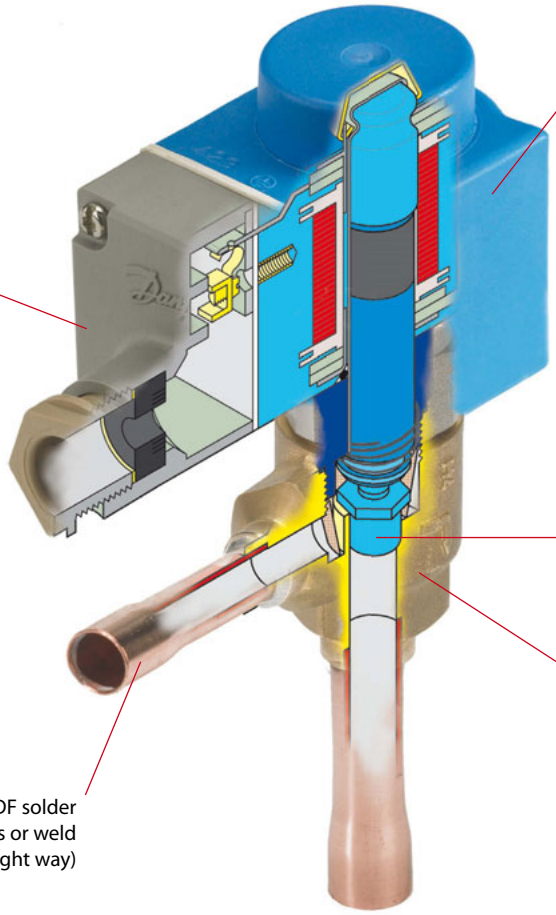

Applications	Advantages	Facts
· Traditional refrigeration · Cold rooms · Water chillers	· The AKV valves are supplied as a part programme, as follows: - Separate valve incl. exchangeable orifice - Separate coil · The valve requires no adjustment	· The AKV 10 valves cover a capacity range from 0.6 kW to 14 kW (404A/ R507) and are divided into 7 capacity ranges. · The AKV 15 valves cover a capacity range from 14 kW to 85 kW (404A/ R507) and are divided into 4 capacity ranges. · The AKV 20 valves cover a capacity range from 56 kW to 530 kW (404A/ R507) and are divided into 5 capacity ranges. · The AKV valves can be used for HCFC, HFC and R744 (up to the stated max. working pressure) refrigerants.

Technical data and ordering

AKV 10

Valve type	Rated capacity kW [1]				k_v value	Connections			
						Solder ODF			
	R22/ R407C	R134a	R404A/R507	R407C	m³/h	Inlet × outlet in.	Code no.	Inlet × outlet mm	Code no.
AKV 10-1	1.0	0.9	0.8	1.1	0.010	⅜ × ½	068F1161	10 × 12	068F1162
AKV 10-2	1.6	1.4	1.3	1.7	0.017	⅜ × ½	068F1164	10 × 12	068F1165
AKV 10-3	2.6	2.1	2.0	2.5	0.025	⅜ × ½	068F1167	10 × 12	068F1168
AKV 10-4	4.1	3.4	3.1	4.0	0.046	⅜ × ½	068F1170	10 × 12	068F1171
AKV 10-5	6.4	5.3	4.9	6.4	0.064	⅜ × ½	068F1173	10 × 12	068F1174
AKV 10-6	10.2	8.5	7.8	10.1	0.114	⅜ × ½	068F1176	10 × 12	068F1177
AKV 10-7	16.3	13.5	12.5	17.0	0.162	½ × ⅝	068F1179	12 × 16	068F1180

AKV 15

AKV 15-1	25.5	21.2	19.6	25.2	0.25	¾ × ¾	068F5000	18 × 18	068F5001
AKV 15-2	40.8	33.8	31.4	40.4	0.40	¾ × ¾	068F5005	18 × 18	068F5006
AKV 15-3	64.3	53.3	49.4	63.7	0.63	⅞ × ⅞	068F5010	22 × 22	068F5010
AKV 15-4	102	84.6	78.3	101	1.0	1⅛ × 1⅛	068F5015	28 × 28	068F5016

AKV 20

Valve type	Rated capacity kW [1]				k_v value	Connections					
						Solder ODF				Weld	
	R22/ R407C	R134a	R404A/R507	R407C	m³/h	Inlet × outlet in.	Code no.	Inlet × outlet mm	Code no.	Inlet × outlet in.	Code no.
AKV 20-1	102	84.6	78.3	101	1.0	1⅜ × 1⅜	042H2020	35 × 35	042H2020	1¼ × 1¼	042H2021
AKV 20-2	163	135	125	170	1.6	1⅜ × 1⅜	042H2022	35 × 35	042H2022	1¼ × 1¼	042H2023
AKV 20-3	255	212	196	252	2.5	1⅝ × 1⅝	042H2024	42 × 42	042H2025	1¼ × 1¼	042H2026
AKV 20-4	408	338	314	404	4.0	2⅛ × 2⅛	042H2027	54 × 54	042H2027	1½ × 1½	042H2028
AKV 20-5	643	533	494	637	6.3	2⅛ × 2⅛	042H2029	54 × 54	042H2029	2 × 2	042H2030

[1] Rated capacities are based on:
Condensing temperature t_c = 32°C
Liquid temperature t_l = 28°C
Evaporating temperature t_e = 5°C

Technical data

Valve type	AKV 10	AKV 15	AKV 20
Tolerance of coil voltage	+10 / –15%	+10 / –15%	+10 / –15%
Enclosure to IEC 529	Max. IP67	Max. IP67	Max. IP67
Working principle (Pulse-width modulation)	PWM	PWM	PWM
Recommended period of time	6 Seconds	6 Seconds	6 Seconds
Capacity (404A/R507)	0.6 to 14 kW	14 to 85 kW	56 to 530 kW
Regulation range (Capacity range)	10 to 100%	10 to 100%	10 to 100%
Connection	Solder	Solder	Solder or weld
Evaporating temperature	–50 to 60°C	– 50 to 60°C	– 40 to 60°C
Ambient temperature	– 50 to 50°C	– 40 to 50°C	– 40 to 50°C
Leak of valve seat	<0.02% of k_v-value	<0.02% of k_v-value	<0.02% of k_v-value
MOPD	18 bar	22 bar	18 bar
Filter, replaceable	Internal 100 µm	External 100 µm	External 100 µm
Max. working pressure	AKV 10-1 to 6 PS=52 bar g AKV 10-7 PS=42 bar g	AKV 15-1,2,3 PS 42 bar g AKV 15-4 PS 28 bar g	28 bar g

Technical data and ordering

Ordering
Coils for AKV valves

		AKV	AKV	AKV	AKV	AKV	AKV
		10-1 **10-2** **10-3** **10-4** **10-5**	10-6	10-7	15-1 15-2 15-3 15-4	20-1 20-2 20-3	20-4 20-5
D.C. coils	**Code no.**						
220 V d.c. 20 W, standard with terminal box	018F6851	+	+	+	+	+	+
100 V d.c. 18 W, special with terminal box with DIN plugs	018F6780	+	+	+	+	+	+
230 V d.c. 18 W, special with terminal box with DIN plugs	018F6781 [1)] 018F6991 [1)]	+	+	+	+	+	+
230 V d.c. 18 W, special with 2.5 m cable with 4.0 m cable with 8.0 m cable	018F6288 [1)] 018F6278 [1)] 018F6279 [1)]	+	+	+	+	+	+

[1)] Recommended for commercial refrigeration plant

A.C. coils	**Code no.**						
240 V a.c. 10 W, 50 Hz with terminal box with DIN plugs	018F6702 018F6177	+	+	–	+	–	–
240 V a.c. 10 W, 60 Hz with terminal box with DIN plugs	018F6713 018F6188	+	+	–	+	–	–
240 V a.c. 12 W, 50 Hz with terminal box	018F6802	+	+	+	+	+	–
230 V a.c. 10 W, 50 Hz with terminal box with DIN-plugs	018F6701 018F6176	+	+	–	+	–	–
230 V a.c. 10 W, 60 Hz with terminal box with DIN-plugs	018F6714 018F6189	+	+	–	+	–	–
230 V a.c. 10 W, 50/60 Hz with terminal box with DIN-plugs	018F6732 018F6193	+	+	–	+	–	–
230 V a.c. 12 W, 50 Hz with terminal box	018F6801	+	+	–	+	+	–
230 V a.c. 12 W, 60 Hz with terminal box	018F6814	+	+	–	+	+	–
115 V a.c. 10 W, 50 Hz with terminal box with DIN-plugs	018F6711 018F6186	+	+	–	+	–	–
115 V a.c. 10 W, 60 Hz with terminal box with DIN-plugs	018F6710 018F6185	+	+	–	+	–	–
110 V a.c. 12 W, 50 Hz with terminal box	018F6811	+	+	–	+	+	–
110 V a.c. 12 W, 60 Hz with terminal box	018F6813	+	+	–	+	+	–
110 V a.c. 20 W, 50 Hz with terminal box	018Z6904	+	+	+	+	+	+
24 V a.c. 10 W, 50 Hz with terminal box with DIN-plugs	018F6707 018F6182	+	–	–	+	–	–
24 V a.c. 10 W, 60 Hz with terminal box with DIN-plugs	018F6715 018F6190	–	–	–	+	–	–
24 V a.c. 12 W, 50 Hz with terminal box	018F6807	+	–	–	+	+	+
24 V a.c. 12 W, 60 Hz with terminal box	018F6815	+	–	–	+	+	+
24 V a.c. 20 W, 50 Hz with terminal box	018F6901	+	+	+	+	+	+
24 V a.c. 20 W, 60 Hz with terminal box	018F6902	+	+	+	+	+	+

Application example

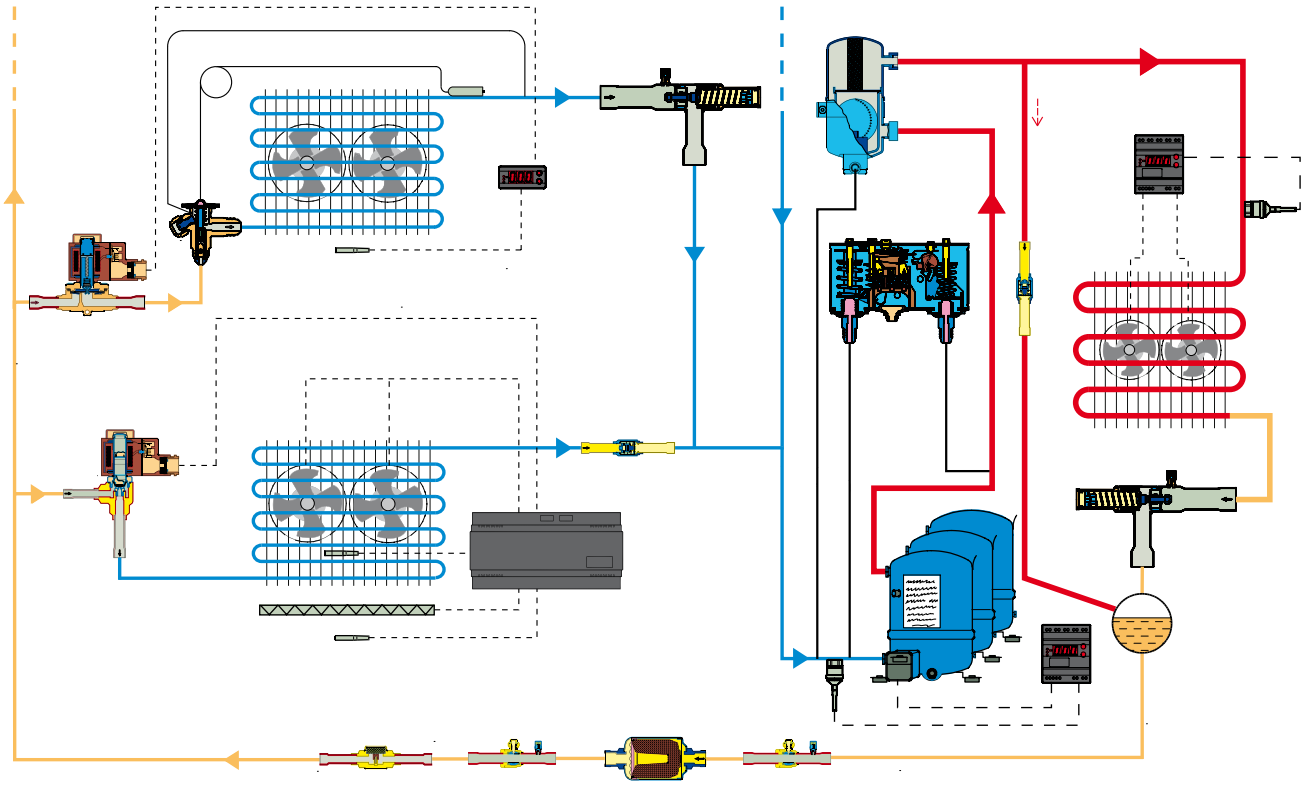

ETS 6 – Electronic expansion valves

Compact and lightweight, the current range are available with different capacities, and can be used with all common refrigerants (e.g R410A, R407C, R404A, R134a, R22). Bi-flow operation is also possible for reversible system such as heat pumps.
The valve design uses uni-polar drives, and different control solutions exist that are compatible with uni-polar drives.

Features

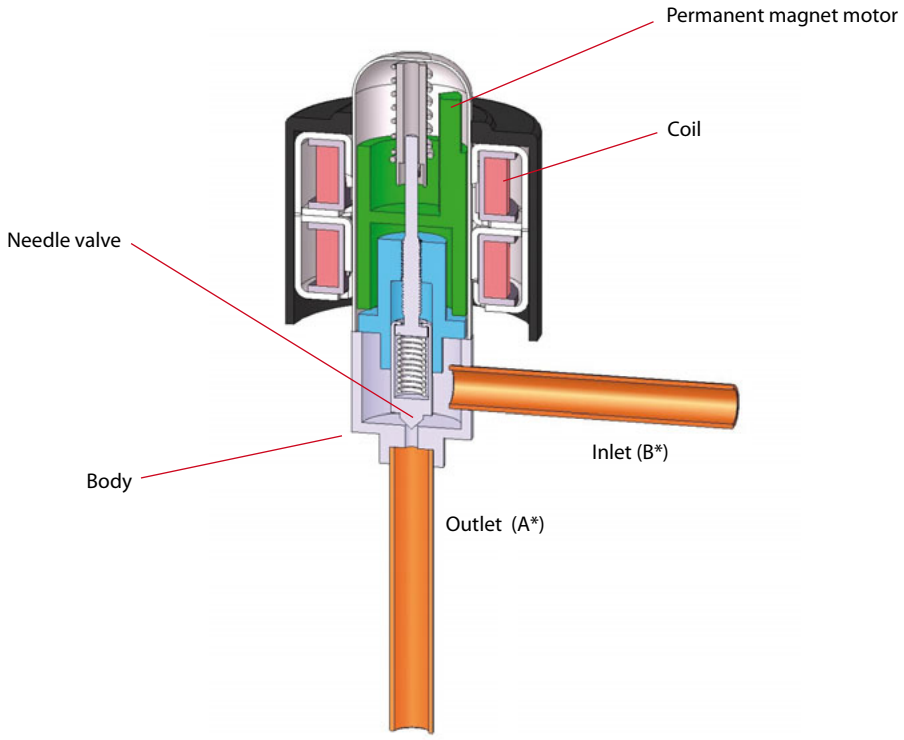

Cross section diagram of ETS 6 series
* Refers to refrigerant flow in cooling mode

Applications	Advantages	Facts
· Heat Pumps · Modular Air Cooled Chillers · VRF, Multi Split · Inverter Mini Split · Bus air conditioning · IT cooling	· Precision flow control with high resolution · Proven know-how and high reliability · Power saving design that enables energy efficiency. · Compact & lightweight hermetic design with removable coil · Bi-flow operation for reversible systems	· ETS 6 are designed for HFC/HCFC conditions including R410A, providing 47 bar (670 psig) working pressure. · EIM 336, EKD 316 and MCX are examples of Danfoss controllers with drivers matching the ETS 6 needs. · For manual operation and service of ETS 6 valves an AST-g service driver is available.

Maximum working pressure	47 bar (670 psig), 48 bar (680 psig) in abnormal condition
Compatible refrigerants	HFC, HCFC (e.g. R22, R134a, R404A, R407C, R410A, R507)
Refrigerant oil	All mineral oils and ester oils (to lubricate ETS 6 valve)
Ambient temperature	-30°C to 60°C (-22 °F to 140° F)
Fluid Temperature	-30°C to 70°C (-22 °F to 158° F)
Durability	Tested for 60 Million total pulses supplies to the valve during partially open valve, which is comparable to 150,000 cycles if the valve is operated between 100 to 300 pulses open. Tested for 30,000 full stroke cycles including 20 pulse overdrive at each closing.
Ambient humidity	95% RH or less
Modulation	Permanent magnet type direct operating stepper motor
Excitation method	1-2 phase
Electrical connection	JST XHP-6 and JST XHP-5
Excitation speed	min. 30 pps (pulses per second) to max. 90 pps, recommended 31.3 pps
Operating range	0 to 480 pulses, no holding power required (NOTE: do not apply more than 520 pulses)
Full motion transit time	e.g. 16 sec @ 30 pps, 6 sec @ 80 pps
Installation position	With coil on the upper side and the valve/coil assembly within ±15˚of the vertical axis
Liquid line solenoid valve	If using a liquid line solenoid valve, it must be installed in such a way that it does not create liquid hammering in ETS 6 valve
Max. coil winding temperature	115°C (239° F)

Technical specifications and ordering

Valve Specifications

Model No.	Single pack Code no.	I-pack Code no. (100 units per box)	Orifice	Nominal Capacity [kW]					Connection (solder)		Valve tube confi-guration	MWP	MOPD	Max. Reverse Pressure	Flow direction charec-teristic
			[mm]	R22	R134a	R404A/ R507	R407C	R410A	A [mm]	B [mm]		[bar]	[bar]	[bar]	
ETS 6 - 10	034G5005	034G5000	1	2.6	2	1.8	2.7	3.1	7.94	7.94	90°	47	35	35	Bi-flow
ETS 6 - 14	034G5015	034G5010	1.4	5.8	4.5	4.1	5.9	6.8	7.94	7.94	90°	47	35	20	Bi-flow
ETS 6 - 18	034G5026	034G5024	1.8	10.3	8.1	7.3	10.6	12.1	6.35	6.35	90°	47	35	28	Bi-flow
ETS 6 - 25	034G5035	034G5030	2.5	19.6	15.3	13.8	20.1	23	7.94	7.94	90°	47	35	22	Bi-flow
ETS 6 - 32	034G5055	034G5050	3.2	28.8	22.5	20.3	29.6	33.9	7.94	7.94	90°	47	28	12*	Bi-flow

Nominal Capacity based on:
CT=38°C, ET=5°C, SC=0°C, SH=0°C
*Please contact Danfoss if higher maximum reverse pressure valve is required.

Coil Specifications

Model No.	Single pack Code no.	I-pack Code no. (100 units per box)	Relevant valve model	Voltage (current)	Cable length [m]	Protective cable tube length [m]	Enclosure	Insulation class	Connector
ETS 6 Coil	034G5105	034G5100	Coil for ETS 6 valves	12 VDC (0.26A/phase)	0.7	0.6	IP66	Class E (UL Class 105 (A))	JST XHP-6
ETS 6 Coil	034G5115	034G5110	Coil for ETS 6 valves	12 VDC (0.26A/phase)	0.7	0.6	IP66	Class E (UL Class 105 (A))	JST XHP-5

Please contact Danfoss for longer cable length

ETS 12.5 - 400 – Electronic expansion valves

ETS is a series of electrically operated expansion valves for precise liquid injection in evaporators for air conditioning and refrigeration applications.
The valve piston and linear positioning design is fully balanced, providing bi-flow feature as well as solenoid tight shut-off function in both flow directions.
The ETS needs a current or voltage driver as partner to be operated.

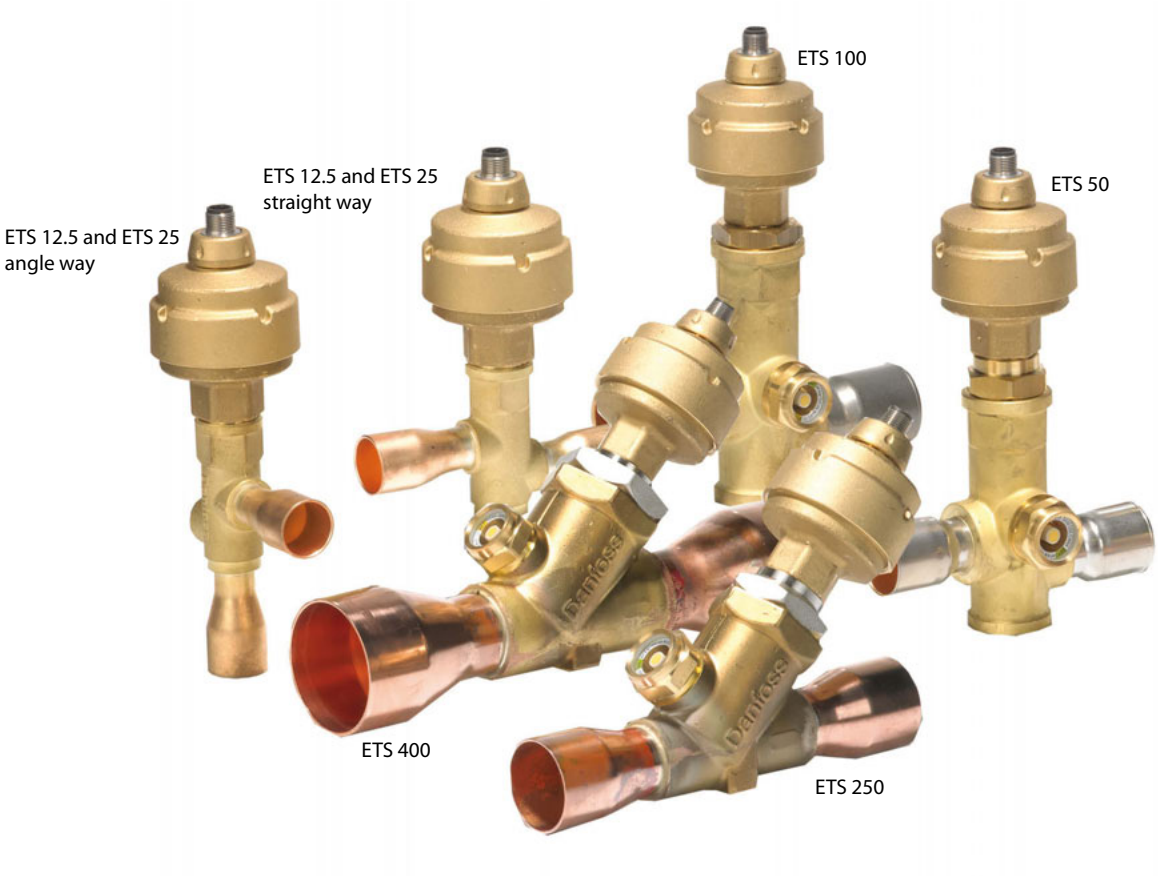

Applications	Advantages	Facts
· Heat pumps · Refrigeration · Air conditioning · Chillers	· Precise positioning for optimal control of liquid injection. · Balanced design (ETS 12.5 to 400) providing bi-flow operation as well as solenoid tight shut-off function in both flow directions. · Lower energy consumption · ETS 50 & ETS 100 feature improved process and productivity due to waterless brazing i.e soldering without wet cloth for cooling. · ETS 50 to 400 are all designed with built-in sight glass with moisture indicator. · Internal and external corrosion resistant design	· ETS valves are compatible with wide range of all common refrigerants, HFC, HCFC. · ETS 12.5, ETS25, ETS 50, ETS100 provides working pressure of 45.5 bar (660 psig) and ETS 250, ETS 400 provides 34 bar (493 psig). · EKC316A, 312 and EKD316 are examples of Danfoss controllers with drivers matching the ETS needs. · Equipped with M12 connector for cable connection (cable and connector assemblies as accessories) · For manual operation and service of ETS valves an AST-g service driver is available.

Technical data

Technical data

Compatibie refrigerants	HFC, HCFC (e.g. R410A, R407C, R404A, R134a, R22)
Refrigerant oil	All mineral oils and ester oils
Comply with P.E.D.	Yes
MOPD	33 bar (478.6 psig)
Max. working pressure (PS/MWP)	ETS 12.5/ETS 25/ETS 50/ETS 100: 45.5 bar (660 psig) ETS 250/ETS 400: 34 bar (493 psig)
Refrigerant temperature range	–40°C to 65°C (–40°F to 149°F)
Ambient temperature	–40°C to 60°C (–40°F to 140°F)
Material of Construction	ETS 50, 100: Body and AST enclosure in brass, connections in bi-metal (stainless steel/copper) ETS 12.5, 250, 400: Body and AST enclosure in brass, connections in copper

Electrical data

Motor enclosure	IP67
Stepper motor type	Bi-polar - permanent magnet
Step mode	2 phase full step
Phase resistance	52 Ω ±10%
Phase inductance	85 mH
Holding current	Depends on application. Full current allowed (100% duty cycle)
Step angle	7.5° (motor), 0.9° (lead screw), Gearing ration 8.5:1. $(38/13)^2$:1
Nominal voltage	(Constant voltage drive) 12 V dc -4% +15%, 150 steps/sec.
Phase current	(Using chopper drive) 100 mA RMS -4% +15%,
Max. total power	Voltage / current drive: 5.5 / 1.3 W (UL: NEC class 2)
Step rate	150 steps/sec. (constant voltage drive) 0-300 steps/sec. 300 recommended (chopper current drive)
Total steps	ETS 12.5, 25, 50: 2625 [+160 / -0] steps ETS 100: 3530 [+160 / -0] steps ETS 250 and 400: 3810 [+160 / -0] steps
Full travel time	ETS 12.5, 25, 50: 17 / 8.5 sec. (voltage / current) ETS 100: 23 / 11.5 sec. (voltage / current) ETS 250 and 400: 25.4 / 12.7 sec. (voltage / current)
Lifting height	ETS 12.5, 25, 50: 13 mm (0.5 in.) ETS 100: 16 mm (0.6 in.) ETS 250-400: 17.2 mm (0.7 in.)
Reference position	Overdriving against the full close position
Electrical connection	M12 connector

⚠ NOTE:
Full life time of ETS can only be ensured if oil is present in the system. In oil-free systems, life time of the ETS cannot be guaranteed.